RE320
Variable-D Dynamic Cardioid Microphone

Key Features:

- Variable-D pattern control minimizes positional and off-axis tonal shifts
- Integrated hum-bucking coil and integral pop filters provide virtually noiseless performance
- Unique dual-voicing switch selects from two response curves
- Kick drum curve is ideal for bass drum micing
- General curve is ideal for other instruments and voice
- Extremely durable build, fit and finish

General Description:

The RE320 is a professional quality dynamic microphone designed specifically for sound reinforcement and recording applications requiring extremely low noise and the highest level of predictable tonal and transient response. Ideal for capturing a wide variety of instrument and vocal sources, the RE320 delivers unparalleled detail, dynamic content and natural tonal performance.

Variable D - Electro-Voice's exclusive solution to the tonal changes associated with the proximity effect found in other directional microphones. Providing balanced and uniform frequency response up to 180° off-axis, the result is always stable and linear tonal performance even when the sound source is moving around the mic. Ideal for capturing the critical details of amplified and acoustic instruments, as well as voice, Variable-D capsules deliver impeccably smooth and natural tone on virtually any sound source.

Utilizing the same hum-bucking coil technology found in the RE20 and RE27N/D to arrest electro-magnetic field interference introduced from sources close to the microphone, the RE320 produces an ultra-quiet signal path free from the hum and buzz found in other dynamic microphones.

The RE320 incorporates a two-position frequency response contour switch which allows engagement of two vastly dissimilar performance curves.

- Selecting the left-hand switch position engages a curve specifically designed for use on kick drums. With dips and peaks exactly where kick drums need a little EQ attention, the result is an incredibly tight "insta-kick" sound requiring little if any additional EQ when the microphone is properly positioned at the drum.

- Selecting the right-hand switch position engages a flatter, more linear curve designed to be ideal for other instruments (such as guitar amps, bass amps, low toms, percussion, brass and wind instruments etc.) as well as voice (music and speech) in many applications. The response is smooth, natural and articulate with a minimum of discolored off-axis bleed from surrounding sound sources.

Technical Specifications:

Generating Element:	Dynamic N/Dym Magnet Structure
Frequency Response:	30 Hz - 18,000 Hz (kick curve) 45 Hz - 18,000 Hz (general curve)
Polar Pattern:	Cardioid
Impedance:	150 ohms balanced
Sensitivity, Open Circuit Voltage, 1 kHz:	2.5 mV/pascal
Hum Pickup Level, typical (60 Hz/1 millioersted field):	-130 dBm
Polarity:	Pin 2 will be positive referenced to Pin 3 with positive pressure on diaphragm
Case Material:	Steel
Dimensions:	Length = 216.7 mm (8.53 in) Widest Diameter = 54.4 mm (2.14 in) Body Diameter = 49.2 mm (1.94 in)
Finish:	Semi-Gloss Black
Net Weight:	681 g (1 lb, 8 oz)
Shipping Weight:	1503 g (3 lb, 5 oz)
Accessories Furnished:	81715 stand clamp
Optional Accessories:	**WSPL-2** Foam Wind Screen **SASM-20** Isolation Shock Mount **309A** Isolation Mount

Frequency Response:

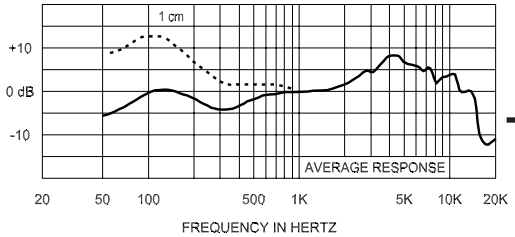

The frequency contour in this switch position is engineered specifically for kick drum, delivering rock-solid tone, punch and point.

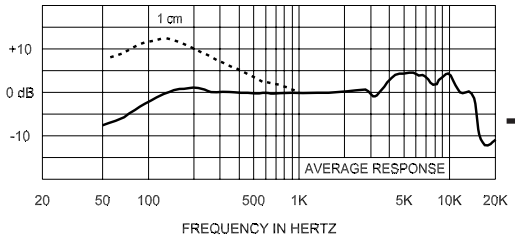

The frequency contour in this switch position is engineered specifically for voice, acoustic instruments and amplified instruments.

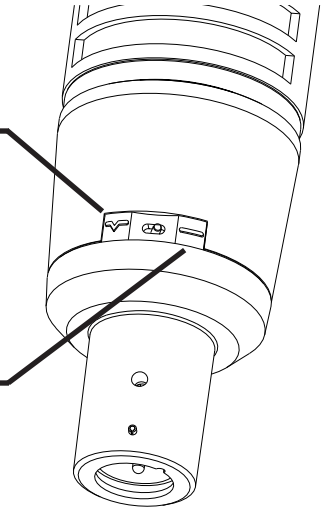

Architects' and Engineers' Specifications:

The microphone shall be a cardioid type with integral blast filter protecting all acoustic openings. The blast filter shall also serve as a shock mount for the internal microphone element. The microphone shall have an integral passive filter network allowing two separate voicing contours to become alternately engaged via a two-position switch. The left hand position of this switch shall engage a curve allowing a throughput bandpass of 30-18,000 Hz with a rise peaking at 125Hz, a -4.5dB attenuation centered at 380 Hz, with additional peaks at 2,800 Hz, 4,200 Hz and 7,200 Hz to achieve popular kick drum response. The right hand position of this switch shall engage a more linear curve allowing a throughput bandpass of 45-18,000 Hz where the response is virtually flat to 4,000 Hz, down 2 dB at 4,200 Hz, with a gradual rise to +4 dB at 5,000 Hz, flattening at 7,200 Hz, and an additional +4 dB rise centered at 10,000 Hz. The microphone shall incorporate a hum-bucking coil to arrest electromagnetic noise. Output level shall be 2.5mV/Pascal. Nominal impedance shall be 150 ohms. Response at any angular position away from the major axis shall be essentially similar to the response on the major axis, but attenuated uniformly at all frequencies by an amount appropriate to that angular position. Rear attenuation at frequencies from 45-10,000 Hz (refer to major axis signal value) shall exceed 15 dB from major axis in any plane. Rear attenuation above 10,000 Hz shall exceed 10 dB. Polar characteristics shall be sufficiently uniform in all planes so that it is, effectively, a cardioid of revolution. There shall be a filter to prevent dust particles from reaching the diaphragm. The case shall be made of steel. The microphone shall have a maximum diameter of 54.4 mm (2.14 in.), a body diameter of 49.2 mm (1.94 in.) and a length of 216.7 mm (8.53 in.). Finish shall be a semi gloss black. A stand adapter shall be supplied. The Electro-Voice RE320 is specified.

Dimension Drawing:

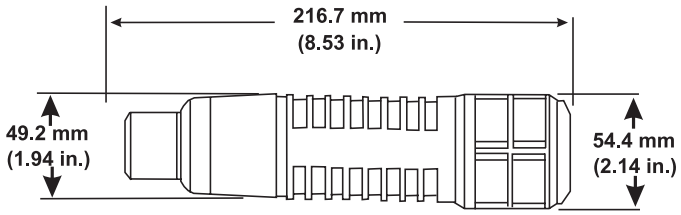

Polar Response:

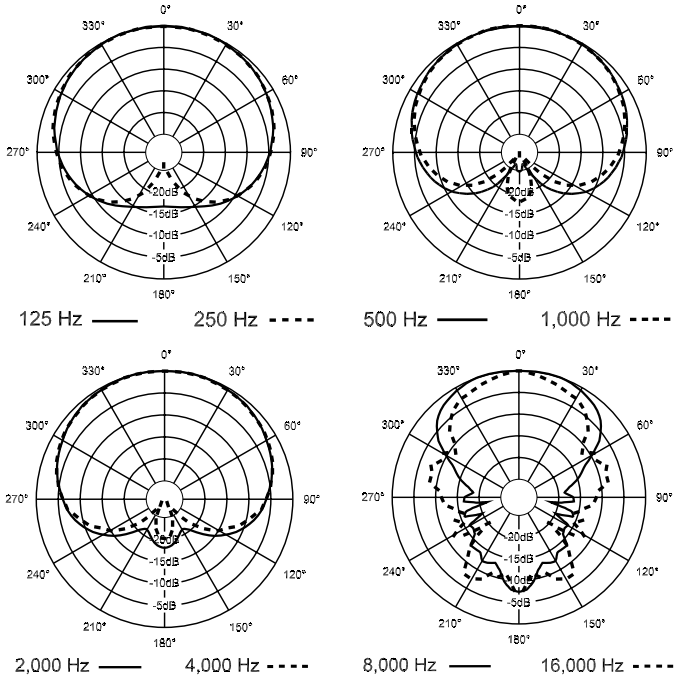

RE320 Part Numbers

- **F.01U.120.616 RE320, Dynamic Microphone**

Optional Accessories/Replacement Parts

- **F.01U.118.949 SAPL-2, Stand Adapter**
- **F.01U.118.953 WSPL-2, Foam Wind Screen**
- **F.01U.171.056 SASM-20, Shock Mount**
- **F.01U.117.892 309A, Shock Mount**

Warranty:

Please refer to the Limited Warranty information found at: www.electrovoice.com

Electro-Voice

12000 Portland Avenue South, Burnsville, MN 55337
Phone: 952/884-4051, Fax: 952/884-0043

www.electrovoice.com

© Bosch Communications Systems 04/2011

Part Number LIT000355 Rev 2

U.S.A. and Canada only. For customer orders, contact Customer Service at:
800/392-3497 Fax: 800/955-6831
Europe, Africa, and Middle East only. For customer orders, contact Customer Service at:
+ 49 9421-706 0 Fax: + 49 9421-706 265
Other Internatonal locations. For customer orders, Contact Customer Service at:
+ 1 952 884-4051 Fax: + 1 952 887-9212
For warranty repair or service information, contact the Service Repair department at:
800/685-2606
For technical assistance, contact Technical Support at: **866/78AUDIO**

Specifications subject to change without notice.