XLC-BGK
X-Line Compact Bottom Grid Kit User Instructions

XLC-BGK Bottom Grid Kit

The Electro-Voice® X-Line Compact Bottom Grid Kit consists of the same rigging attachment parts as those integrated into the top of an XLC Loudspeaker. When used at the bottom of an XLC Loudspeaker Array along with an additional XLC-Grid (sold separately), the XLC-BGK allows for a column of X-Line Compact Loudspeakers to have a secondary rigging or anchoring point while being safely pulled back to desired angles.

When using the Bottom Grid Kit never exceed the rigging rating of the XLC loudspeaker systems used with it. These ratings account for stresses resulting from the load angles encountered in curved arrays. These ratings are the limiting factors. Consult the XLC Rigging manual, and/or the rigging label on the XLC loudspeaker systems for the ratings when used in curved arrays.

XLC-BGK (302028-001) Parts List

Item	Qty	Part Number	Description
1	2	560176-000	Button Bar Subassy
2	2	500674-000	Rear Swing Arm
3	2	560344-000	Quick-Release Pin
4	2	581041-000	Shoulder Bolt

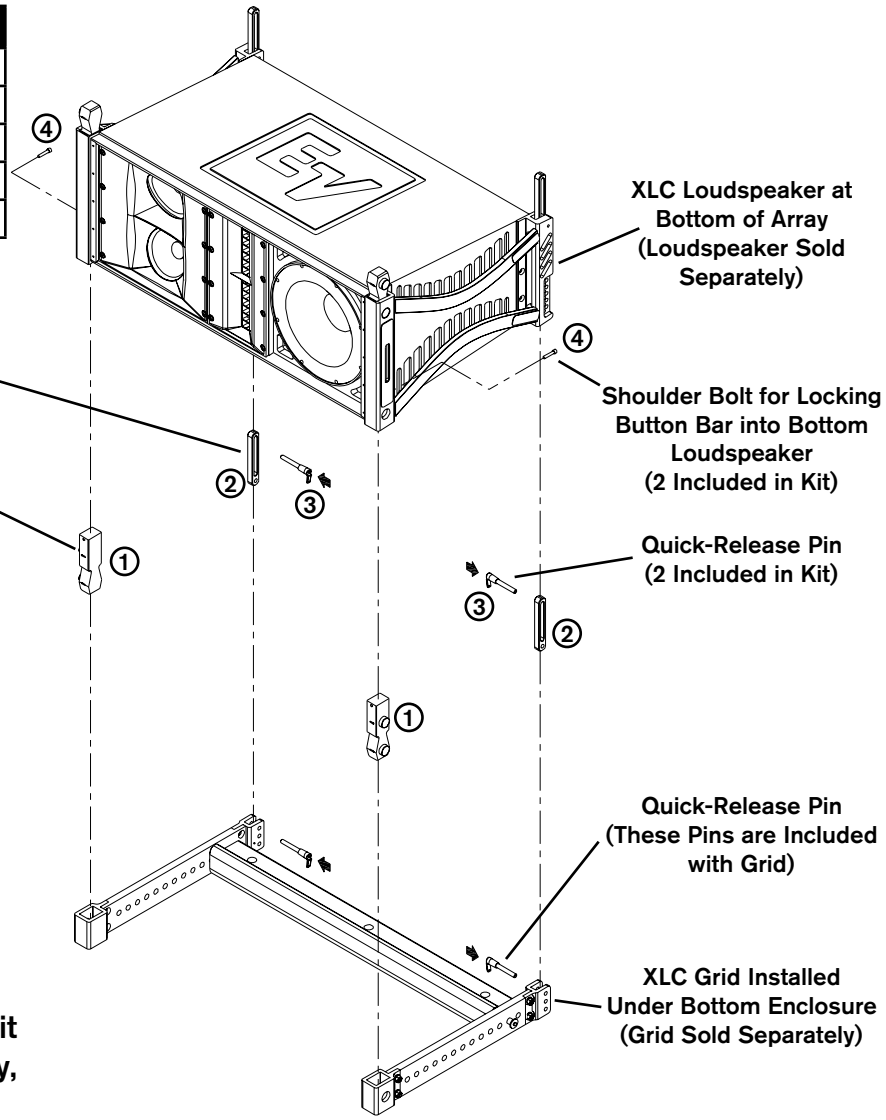

Figure 1: Attaching Bottom Grid Kit to Loudspeaker at Bottom of Array, along with a Secondary Grid

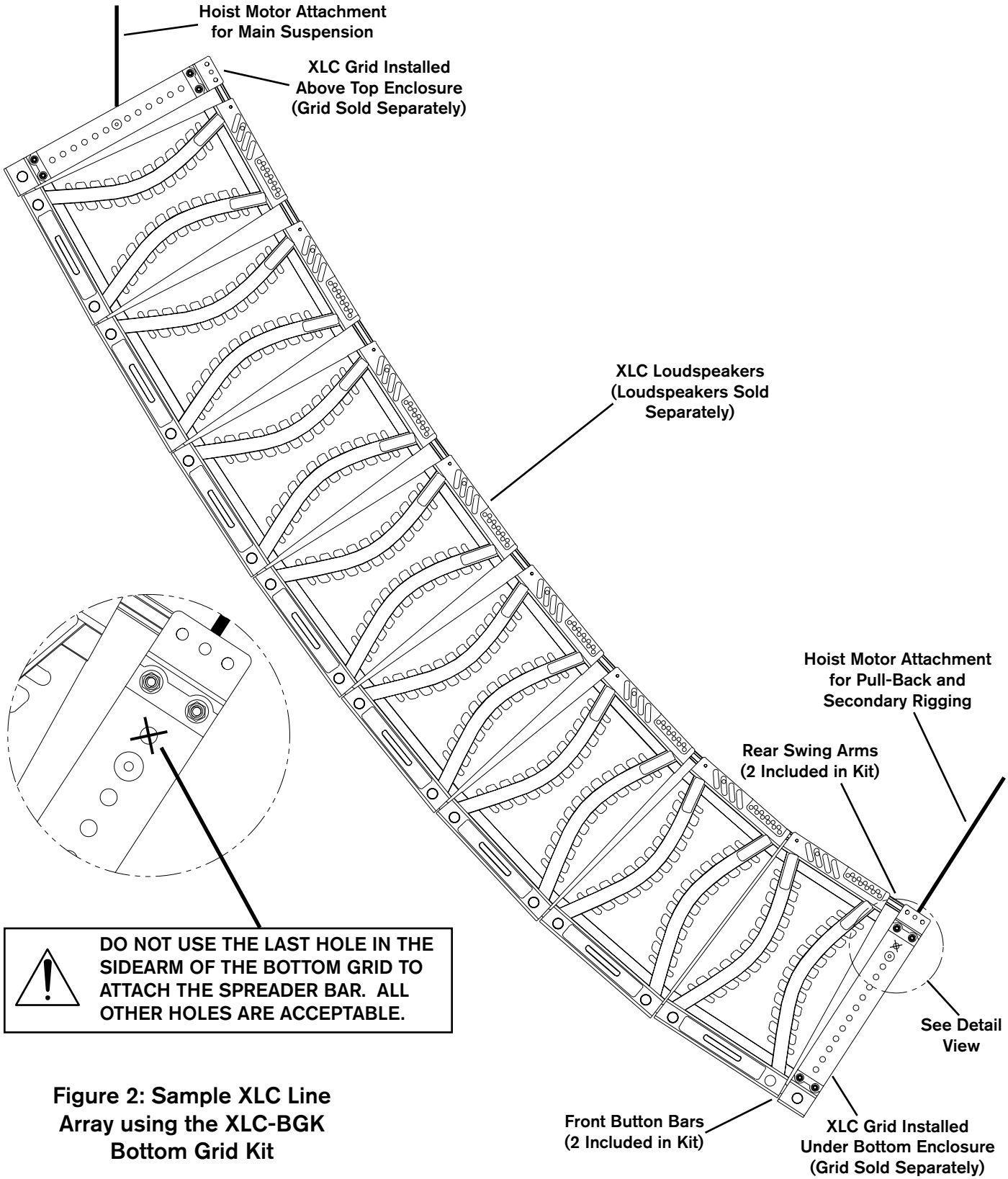

Figure 2: Sample XLC Line Array using the XLC-BGK Bottom Grid Kit

Electro-Voice®

12000 Portland Avenue South, Burnsville, MN 55337
Phone: 952/884-4051, Fax: 952/884-0043

www.electrovoice.com

© Bosch Communications Systems 04/2008

Part Number 38110-522 Rev B

U.S.A. and Canada only. For customer orders, contact Customer Service at:
800/392-3497 Fax: 800/955-6831
Europe, Africa, and Middle East only. For customer orders, contact Customer Service at:
+ 49 9421-706 0 Fax: + 49 9421-706 265
Other Internatonal locations. For customer orders, Contact Customer Service at:
+ 1 952 884-4051 Fax: + 1 952 887-9212
For warranty repair or service information, contact the Service Repair department at:
800/685-2606
For technical assistance, contact Technical Support at: **866/78AUDIO**

Specifications subject to change without notice.