Electro-Voice

903E

Microphone, Electret Noise Cancelling

Cage Code #81134

Specifications

(Per RTCA/DO-170

Generating Element:
Electret Condenser

Frequency Response:
300-5,000 Hz - see Figure 1

Impedance
Matches standard aircraft carbon activity

Sensitivity:
400mV ±3dB for 114dB re 20µ pascals (normal speech)
(output of built-in amplifier)

Power Requirements:
See test circuit Figure 5
(operates into carbon microphone circuit)

Current Drain:
11ma at 8V dc (12-volt system)
27ma at 16 V dc (24-volt system)

Case Material:
Black ABS

Dimensions:
91.5mm (3.6in.) length, less hanger
61.0mm (2.4in.) width
35.6mm (1.4in.) depth

Weight:
180 grams (.40 lb.)

Accessories Supplied:
Panel mounting bracket (8474)

Certification:
FAA TSO C-58a, Category B

Description

The Electro-Voice model 903E condenser handheld microphone is designed for use in high noise environments where high speech intelligibility is desired such as in aircraft cockpits, passenger cabins, control towers or terminal areas.

The electret element virtually eliminates EMI, RFI, and magnetic signals channeling the full power of your communications system into crisp, articulate voice transmission with the RTCA frequency response.

The microphone is recommended for advanced technology air transports employing flight instrumentation systems (glass cockpits). Its proven electret technology will not decay or deteriorate in any way over extended periods.

Features

- Highly reliable
- EMI and RFI protected
- Tailored voice response for high articulation per RTCA/DO-170
- Immune to aircraft generated magnetic fields
- Greater durability
- Lightweight
- 903-1341 (with PJ-068 connector)
- 903-1342 (with A4M connector)

Warranty (Limited)

Electro-Voice Aircraft Microphone are guaranteed for a period of thirty-six months from date of original purchase against malfunction due to defects in workmanship and materials. If such malfunction occurs, microphone will be repaired or replaced (at our option) without charge for materials or labor if delivered prepaid to the proper Bosch service facility. Unit will be returned prepaid. Warranty does not extend to finish, appearance items, cables, cable connectors, switches or malfunction due to abuse or operation under other than specified conditions, nor does it extend to incidental or consequential damages. Some states do not allow the exclusion or limitation of incidental or consequential damages, so the above exclusion may not apply to you. Repair done by other agency rather than Bosch or one of its authorized service agencies will void this guarantee. This warranty gives you specific legal rights, an you may also have other rights which vary from state to state.

Service and Repair address for this product:

Bosch Security Systems, Inc.
8601 East Cornhusker Hwy
Lincoln, NE 68507-9072 USA

Specifications subject to change without notice.

Overhaul Instructions

1. **Special Tools:** None.
2. **Disassembly:** See Figure 3
   a. Begin disassembly by removing the four screws holding the front and rear case halves together.
   b. Mic head assembly will slip out of the front case half.
   c. The switch plate has to be removed if the cable S/A is to be removed.
3. **Inspection:**
   a. Inspect switch contacts for signs of excessive wear.
   b. Examine unit for damaged or dried-out wiring or sleeving. Check all solder connections for good contacts.
   c. Check cable for signs of damage such as cuts or cracks.
4. **Cleaning:**
   a. Thoroughly clean all dust and dirt from microphone by first using dry, compressed air to dislodge dirt from inaccessible corners. Clean each part with a lint-free cloth or brush.
   b. Remove pits from switch contacts by burnishing.
5. **Repair or Replacement:**
   a. Replace any part which is damaged.
   b. The Mic head assembly is sealed and is not repairable–replace mic head assembly (EV#81393) if defective.
6. **Reassembly:**
   a. Reassembly is the reverse of disassembly step 2.
7. **Check of Microphone Output:** The electret microphone has the carbon equivalent circuit inside the assembly. A speech output of approximately 0.2 volts should be obtained when used with the DO-170 test circuit or an aircraft intercom.
8. **Check at Switch Operation:** (see Figure 2)
   a. With switch released, check the resistance between the red and black (shield) leads. (Tip and sleep on PJ068 plug.) Pin 1 and Pin 2 on A4M.) It should be infinite.
   b. Check resistance between the white and black leads. (Ring and sleeve on PJ068 plug.) (Pin 3 and Pin 4 on A4M.) It should be infinite.
   c. Depress switch and check resistance between read and black leads. (Tip and sleeve on PJ068 plug.) (Pin 1 and Pin 2 on A4M.) It should be zero (0).
   d. Depress switch and check rsistance between white and black leads. (Ring and sleeve on PJ068 plug.) (Pin 3 and Pin 4 on A4M.) It should be from 1,000 to 10,000 Ohms depending on meter polarity.
9. Performance to Specifications:
   a. Electrical conformance to DO-170 requires special equipment and an artificial voice.
   b. Certification can only be given by an Bosch Service Center.

NOTE: Dimensions for customer reference only.

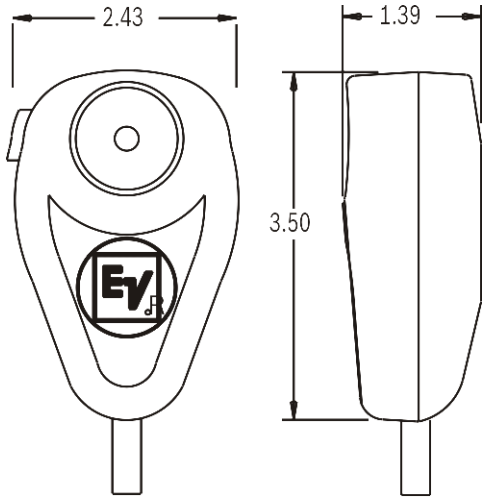

FIGURE 1. 903E Dimensions

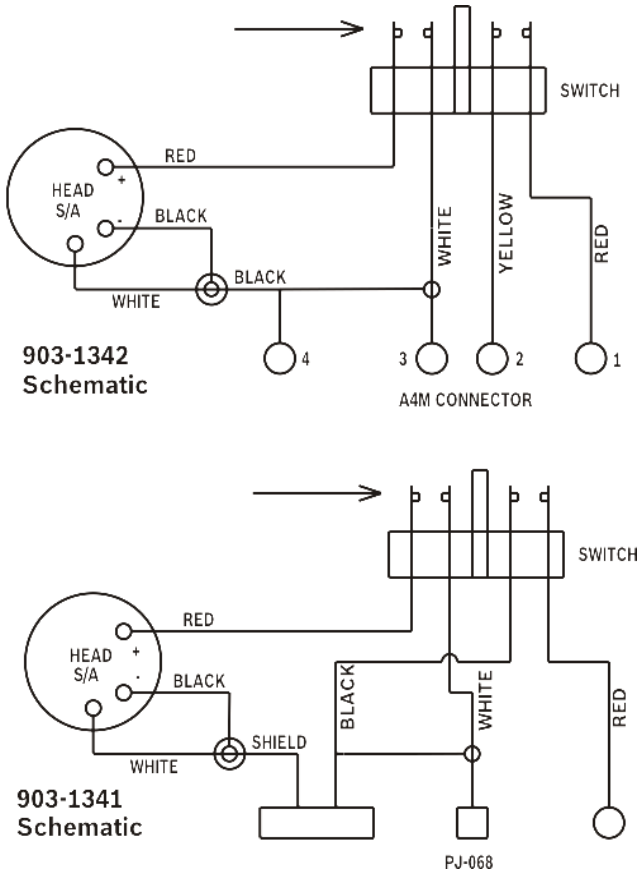

FIGURE 2. 903-1341 & 903-1342 Schematics

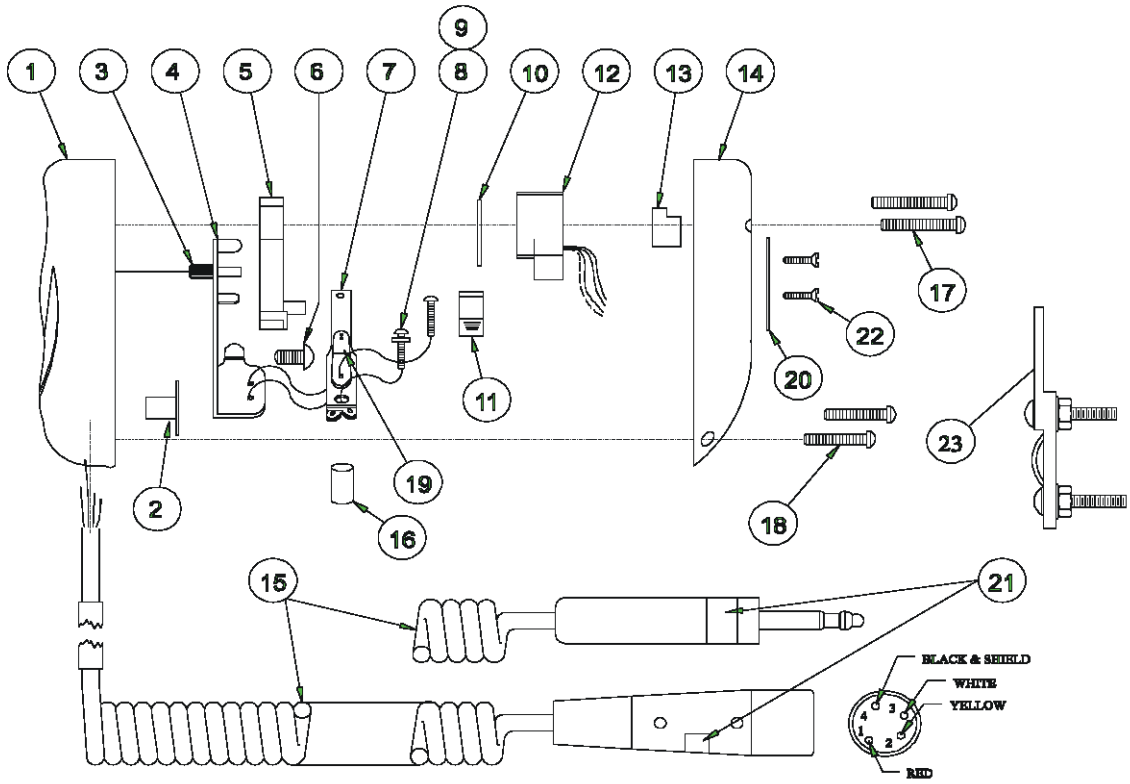

FIGURE 3. 903E Parts Assembly

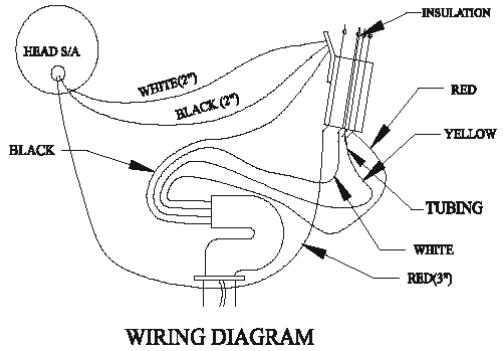

FIGURE 4. Wiring Diagram

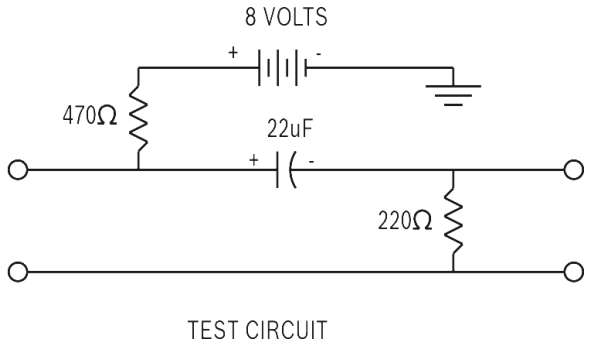

FIGURE 5. Test Circuit

1	82343	1	CASE FRONT S/A
2	20262	1	CLAMP, STRAIN RELIEF
3	75993-AY	1	PIN, PIVOT
4	75992-CR	1	PLATE, SWITCH
5	75991-RL	1	ACTUATOR, SWITCH, PLASTIC
6	62607-AD	1	SCR,#6-20 X 1/4, PAN, HD, XREC, SLOTTED, TYPR BT (25)
7	56065	1	SWITCH, LEAF
8	60126-AP	2	SCR,#3-48 X 3/8, PAN HD, XREC, STL
9	4067-AD	1	WASHER, LOCK, #3, INTERNAL TOOTH
10	38283	1	GASKET, .940-.920 X .375 X .021-.031 THICK, NEOPRENE
11	19048-AE	1	SPRING, SPECIAL, SPRING STEEL
12	81393	1	MICROPHONE S/A
13	72318	1	SPACER, .94 O.D., FOAM
14	72570-RL	1	CASE, BACK S/A
15	81488	1	CABLE S/A WITH PJ-068 CONNECTOR
	81489	1	CABLE S/A WITH A4M CONNECTOR
16	H66005	2	TUBING, 3/32 I.D., THERMOFIT 107E - CRN, BLACK, 3.8”
17	62608	2	SCR, #4-40 X 9/16, FILLET HD, SLOTTED STAINLESS STEEL
18	62609	2	SCR, #4-40 X 3/8, FILLET HD, STAINLESS STEEL
19	27057	1	LUG, #4, SOLDER, SHAKEPROOF #2304-04-00
20	48875	1	NAMEPLATE
21	Y48559	1	NAMEPLATE (903-1342)
	W48559	1	NAMEPLATE (903-1341)
22	C60024-AD	4	SCR, #2 X 1/4, FLT HD, XREC
23	8474	1	MOUNTING BRACKET

Environmental Qualification Form

Microphone, Electret, (Handheld 903E)

TSO Number: TSO-C58a

Specifications Enclosed with Microphones

Conditions	DO-160B Paragraph #	Description of Conducted Tests[a]
Temperature and Altitude[c]	4.0 Rev 1	Equipment tested to Category B1
Low Temperature	4.5.1	
High Temperature	4.5.2, 4.5.3	
Altitude	4.6.1	
Decompression	4.6.2	Decompression tested at 53,000 ft.
Over Pressure	4.6.3	
Temperature Variation[c]	5.0	Equipment tested to Category B
Humidity[c]	6.0	Equipment tested to Category B, Level 1
Shock	6.0	No test required
Operational	7.2	
Crash Safety	7.3	
Vibration[c]	8.0	Equipment tested without shock mounts to Categories K & S (DO-160B, Table 8-1)
Explosion	9.0	No test required
Waterproofness	10.0	No test required
Fluids Susceptibility	11.0	No test required
Sand and Dust	12.0	No test required
Fungus	13.0	No test required
Salt Spray	14.0	No test required
Magnetic Effect	15.0	Equipment tested as Class B
Power Input	16.0	No test required
Voltage Spike Conducted	17.0	Equipment tested to Category A
Audio Frequency Conducted Susceptibility	18.0	No test required
Induced Signal Susceptibility[b]	19.0	Equipment tested to Category B
Radio Frequency Susceptibility[b]	20.0	Equipment tested to Category B
Radio Frequency Emission[b]	21.0	Equipment tested to Category B
Other Test[c]		Fire Resistance tests were conducted in accordance with Federal Aviation Regulation, Part 25, Appendix F, F.A.R 25.853 and F.A.R 25.1359 (d)

a. Tests performed at Electro-Voice, Inc., unless noted otherwise.
b. Tests were performed Radiometrics Midwest Corp. Lombard, IL
c. Tests were performed Gaynes Testing Laboratories, Chicago, IL

Copyright 2010 Bosch Security Systems, Inc.