EVH-1152D/43

Single 15” Two-Way Coaxial 40° x 30° Full-Range High-Efficiency Loudspeaker System

Key Features:

- DH7N 3” (76 mm) diaphragm, 1.4” (36 mm) exit pure titanium compression driver
- SMX2151 15” (381 mm) LF transducer with fully symmetric drive
- Advanced fourth-order crossover network with HF protection
- Coverage pattern: 40° x 30° Constant Directivity™ 12” rotatable waveguide
- 106 dB sensitivity, 139 dB maximum SPL
- System rating: 500 W continuous, 2000 W peak
- Active rating: LF 400 W/HF 75 W continuous (1600 W/300 W peak)
- (28) M10 threaded suspension points
- PI and FG versions available with gland nut and stainless-steel grille

General Description:

The Electro-Voice EVH-1152D/43 is a high-power, two-way horn-loaded coaxial loudspeaker system that can be used in a variety of applications where excellent sound reinforcement, wide bandwidth directivity control, and high efficiency is required in a compact package.

The EVH-1152D/43 utilizes the DH7N, a high-output 3” titanium compression driver, coupled to a Constant Directivity™ 40° x 30° waveguide. The SMX2151 15” woofer was developed using FEA optimization for motor, suspension, and electrical design to ensure very low distortion, high efficiency, and maximum intelligibility at high SPL. The crossover uses steep, 24-dB-per-octave slopes with equalization for very smooth response in the vocal range, linear off-axis response, and a protection circuit for long-term reliability. This combination of technologies results in a smooth response to 20 kHz and excellent pattern control down to 500 Hz.

The EVH-1152D/43’s features make it ideal for many fixed-install applications. The trapezoidal enclosure is constructed of weather-resistant birch, and coated with EVCoat™ for protection from the elements. For maximum protection against extreme outdoor elements, a fully-weatherized fiberglass version is available. The unique acoustic and rigging design allows for vertical and horizontal clusters to be built using any combination of loudspeakers from the entire EVF and EVH series. With seven horn patterns to choose from, along with an assortment of low-frequency and subwoofer loudspeakers, you have the tools to maximize flexibility of system design, no matter what the application and budget. The innovative input panel provides a choice of Phoenix-style connector (included in all standard models) or the ability to add a dual NL4-type connector cover plate or gland-nut cover plate (for weatherizing applications). An externally accessible jumper selects passive or active operation. An available 70.7/100-V transformer kit may be easily mounted to the input panel for use in distributed systems. All these features give you the flexibility to address a large range of venues, quickly and precisely supporting customer requirements with fewer items in inventory.

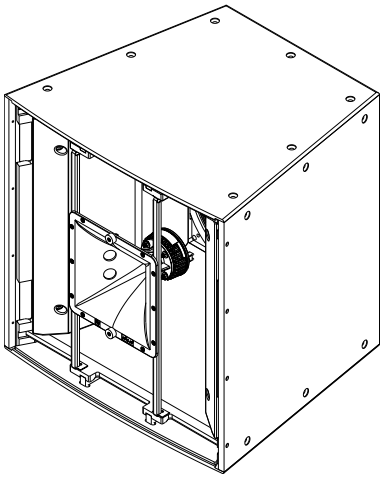

Technical Specifications:

Freq. Response[1] (-3 dB):	60 Hz - 17 kHz
Freq. Range[1] (-10 dB):	50 Hz - 20 kHz
Rotatable Coverage:	40° x 30°
Rec. High-Pass Frequency:	60 Hz
Passive Crossover Freq.:	1300 Hz
Axial Sensitivity[1]:	106 dB (1 W/1 m)
Max. Calculated SPL[1]:	139 dB
Passive Power Handling[2]:	500 W continuous, 2000 W peak
Impedance:	8 ohms (nominal), 6.0 ohms (min.)
LF Transducer - SMX2151, 15” (381 mm) driver	
LF Axial Sensitivity[4]:	107 dB (1 W/1 m)
LF Max. Calculated SPL:	139 dB
LF Power Handling[3]:	400 W continuous, 1600 W peak
LF Impedance:	8 ohms (nominal), 6.1 ohms (min.)
HF Transducer - DH7N, 3” (76 mm) diaphragm compression driver	
HF Axial Sensitivity[4]:	114 dB (1 W/1 m)
HF Max. Calculated SPL:	139 dB
HF Power Handling[3]:	75 W continuous, 300 W peak
HF Impedance:	8 ohms (nominal), 6.0 ohms (min.)

Connectors:	Dual four-pin 10 AWG Phoenix/Euro Block screw-terminals	PI/FG Versions - CDG dual-gland-nut input panel cover included
Enclosure:	13-ply weather-resistant birch with EVCoat™	FG Version - 13-ply weather-resistant birch with fiberglass finish
Grille:	16 GA powder-coated galvanneal with rotatable logo	PI/FG Versions - Stainless steel with hydrophobic cloth
Environmental:	IEC 60529 IP55 for PI and FG versions	
Suspension:	(28) M10 threaded suspension points	
Dimensions (H x W x D):	30.26” x 30.26” x 26.77” (768.6 mm x 768.6 mm x 680.1 mm)	
Weight:	145.5 lb (66.1 kg) net, 160.5 lb (72.9 kg) shipping	

[1] Half-space measurement.
[2] EIA RS-426A, tested for eight hours.
[3] AES 2-1984, tested for eight hours.
[4] Arithmetic averages, 300 - 1,300 Hz (LF) and 1,300 - 5,000 Hz (HF).

EVH-1152D/43 Loudspeaker System

Frequency Response & Impedance:

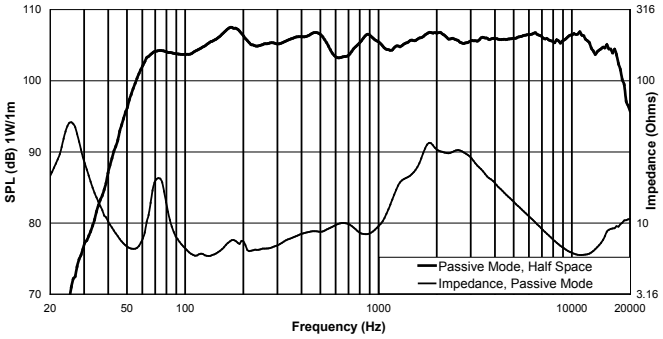

Horizontal Off-Axis Frequency Response:

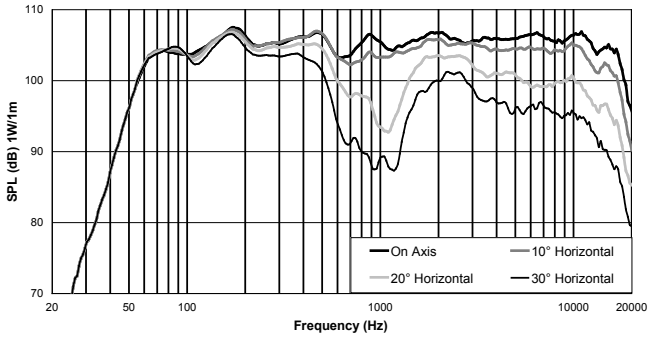

Vertical Off-Axis Frequency Response:

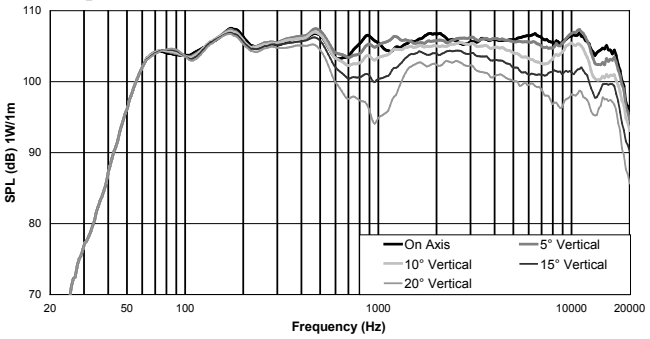

Beamwidth:

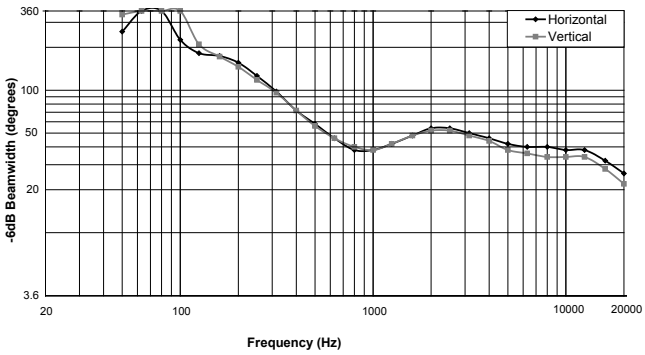

Directivity:

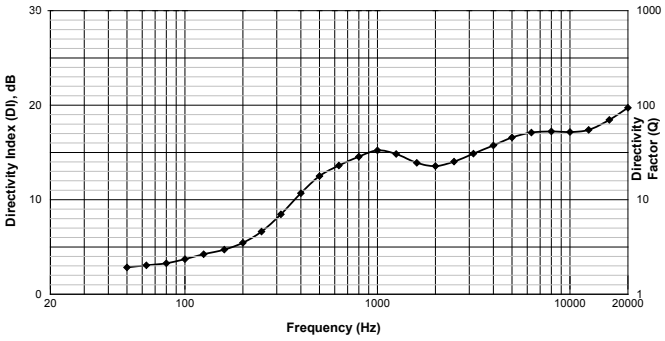

Block Diagram (biamp):

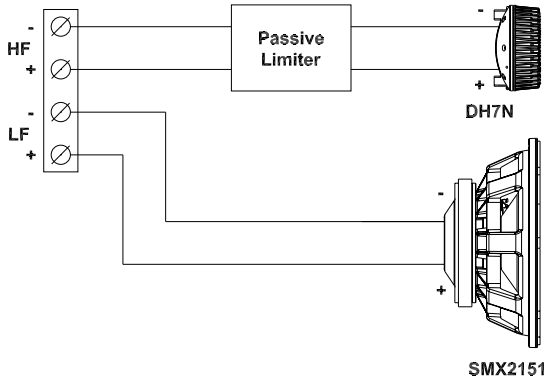

Block Diagram (passive):

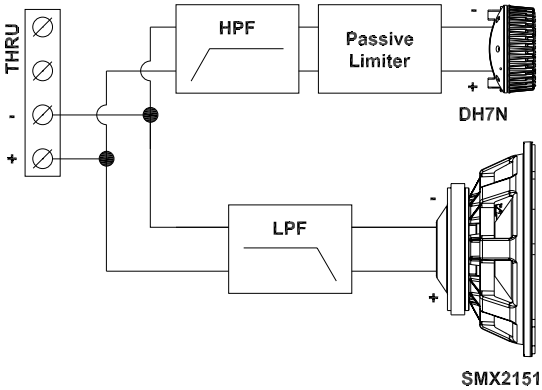

Polar Plots (1/3 Octave):

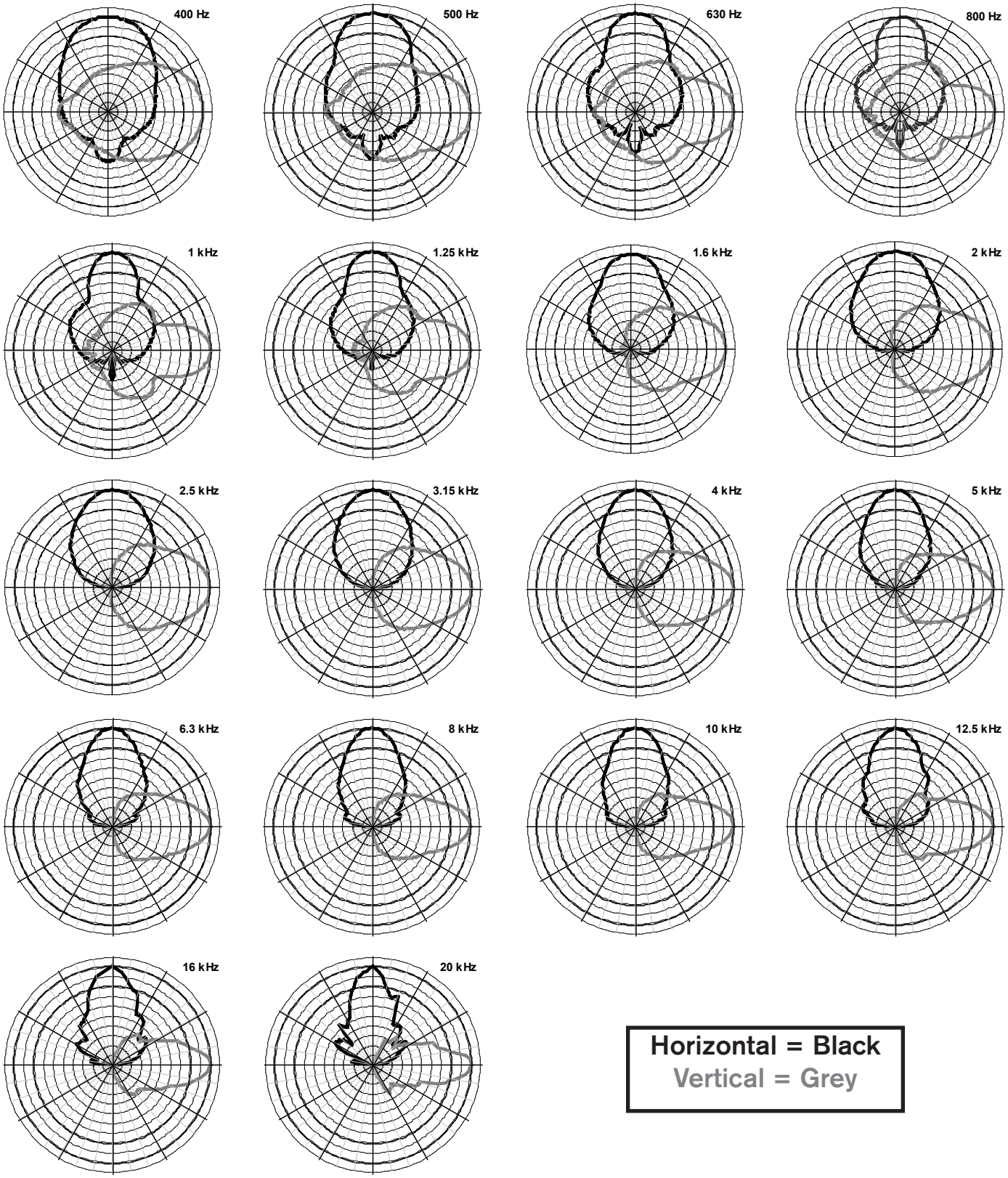

Horizontal = Black
Vertical = Grey

Dimension Drawings:

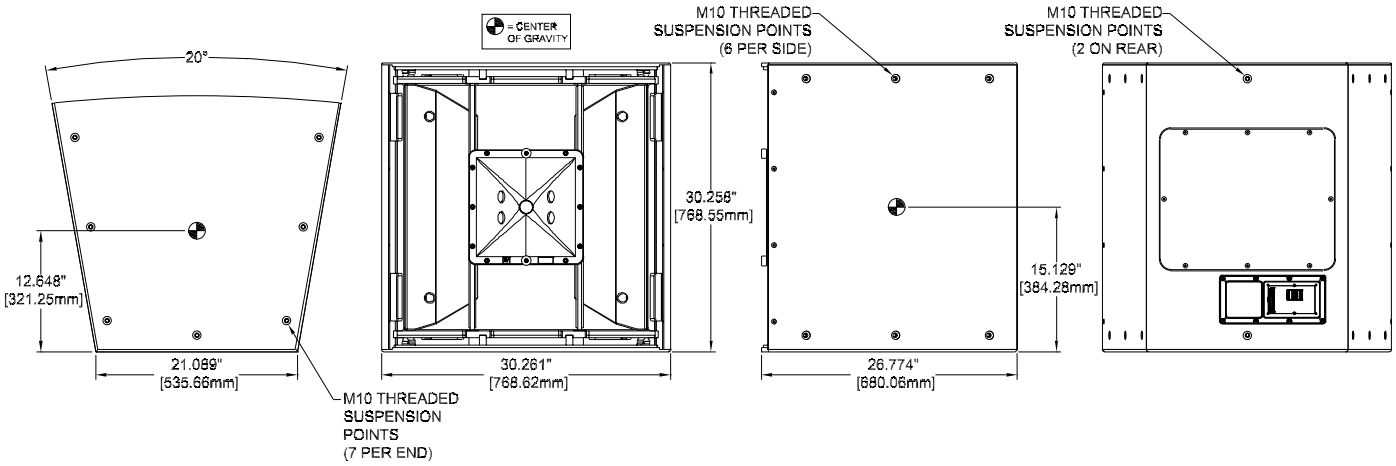

End View **Front View** **Side View** **Rear View**

EVH-1152D/43 Product Descriptions

- **EVH-1152D/43-BLK, 40° x 30°, Black Finish**
- **EVH-1152D/43-WHT, 40° x 30°, White Finish**
- **EVH-1152D/43-PIB, 40° x 30°, Black Finish, Weather Resistant**
- **EVH-1152D/43-PIW, 40° x 30°, White Finish, Weather Resistant**
- **EVH-1152D/43-FGB, 40° x 30°, Black Finish, Weather Resistant Fiberglass**
- **EVH-1152D/43-FGW, 40° x 30°, White Finish, Weather Resistant Fiberglass**

⚠ CAUTION ⚠

This EVH loudspeaker should be suspended overhead only in accordance with the procedures and limitations specified in the *EVF/EVH User Manual* and possible manual update notices. This system should be suspended with certified rigging hardware by an authorized rigging professional and in compliance with local, state, and federal overhead suspension ordinances.

Performance Match

- **EVH-1152D/64, 60° x 40° Coverage**
- **EVH-1152D/66, 60° x 60° Coverage**
- **EVH-1152D/94, 90° x 40° Coverage**
- **EVH-1152D/96, 90° x 60° Coverage**
- **EVH-1152D/99, 90° x 90° Coverage**
- **EVF-2121S, Dual 12” Bass Element**
- **EVF-2151D, Dual 15” Bass Element**
- **CPS2.9, 120V Power Amplifier, 2 x 900W**
- **CPS2.12, 120V Power Amplifier, 2 x 1200W**
- **CPS4.5, 120V Power Amplifier, 4 x 500W**
- **CPS4.10, 120V Power Amplifier, 4 x 1000W**

Accessories

- **CDNL4, Cover Plate, Dual NL4**
- **CSG, Cover Plate, Single Gland Nut**
- **CDG, Cover Plate, Dual Gland Nut**
- **TK-150, 70V Transformer, 150W**
- **HRK-2B, Horiz. Rigging Kit, EVF-SUB, Black**
- **HRK-2W, Horiz. Rigging Kit, EVF-SUB, White**
- **HRK-3B, Horiz. Rigging Kit, EVH, Black**
- **HRK-3W, Horiz. Rigging Kit, EVH, White**
- **VRK-2B, Vert. Rigging Kit, EVF-SUB, Black**
- **VRK-2W, Vert. Rigging Kit, EVF-SUB, White**
- **VRK-3B, Vert. Rigging Kit, EVH, Black**
- **VRK-3W, Vert. Rigging Kit, EVH, White**

Electro-Voice

12000 Portland Avenue South, Burnsville, MN 55337
Phone: 952/884-4051, Fax: 952/884-0043

www.electrovoice.com

© Bosch Communications Systems 05/2011

Part Number F.01U.241.416 Rev 02

U.S.A. and Canada only. For customer orders, contact Customer Service at:
800/392-3497 Fax: 800/955-6831
Europe, Africa, and Middle East only. For customer orders, contact Customer Service at:
+ 49 9421-706 0 Fax: + 49 9421-706 265
Other Internatonal locations. For customer orders, Contact Customer Service at:
+ 1 952 884-4051 Fax: + 1 952 887-9212
For warranty repair or service information, contact the Service Repair department at:
800/685-2606
For technical assistance, contact Technical Support at: **866/78AUDIO**

Specifications subject to change without notice.