QRx212H

Dual 12”Two-Way, Full-Range Loudspeaker System

Key Features:

- **Fully rotatable asymmetrical horn for use in any cabinet position**
- **Tapered Transducer Drive provides smooth coverage**
- **Available in black and by special order in white**
- **Low ceiling height requirement**
- **Externally switchable biamped or passive operation**
- **EV comfort-lift handles**
- **13-ply birch plywood enclosure finished in EVCoat™**
- **Built-in track for easy suspension**
- **Dedicated processing module available for EV’s Modular Precision Series Amplifiers**

General Description:

The QRx-212H/75 is two-way, full-range loudspeaker system incorporating two 12-inch woofers and a 3-inch voice coil compression driver on an asymmetrical 75-degree x 50-degree fully rotatable constant-directivity horn. In factory delivered position when used horizontal, this provides a 15-degree up/35-degree down vertical coverage pattern. The multiangle cabinet design allows this system to easily conform to limited space clearances. The fully rotatable horn allows optimal coverage regardless of cabinet position. The configuration of horn in the center of two LF transducers each driven by different frequencies provides smooth horizontal coverage. The QRx-212H/75 is a good solution for medium size rooms and audiences as a main PA providing moderate levels with good bass response and added punch in the lower and mid frequencies, satisfying most DJ and live band applications. The asymmetrical horn can allow a single box to direct the high frequencies as needed, as well as streamline multi-cabinet arrays when rotated by extending horizontal coverage while minimizing overlapping and allowing tighter packs between the cabinets. The small height requirement makes it ideal for dance floor installations. The addition of the QRx118 or QRx218 subwoofer completes the perfect high level dance rig. The M212 processing module for EV’s Modular Precision Series Amplifiers Provides optimized processing for fullrange use, or in any combination with QRx subwoofers.

Technical Specifications:

System Configuration:	Dual Two-Way, Full-Range
Freq. Response (-3 dB):	75 Hz - 15 kHz[1], 55 Hz - 15 kHz[2]
Freq. Response (-10 dB):	52 Hz - 18 kHz[1], 45 Hz - 18 kHz[2]
Recommended High-Pass Frequency:	45 Hz, 12 dB/octave minimum
Recommended Crossover Frequency Range:	1200 Hz, 24 dB/octave
Axial Sensitivity, SPL Passive: Biamp (LF/HF):	 100 dB (1 watt@1m) 100/112 dB (1 watt@1m)
Max Calculated SPL Long Term: Peak:	 127 dB (1 watt@1m) 133 dB (1 watt@1m)
Continuous Power Handling:	Passive - 600 watts Bi-amp - 600 watts, 75 watts
Peak Power Handling:	Passive - 2,400 watts Bi-amp - 2,400 watts, 300 watts
LF Transducer:	1 x DL12ST 1 x DL12BFH
HF Transducer:	DH7, 3-inch Titanium Diaphragm
Coverage:	75° Hor, 15° up, 35° down (rotatable)
Impedance, Passive: Biamp:	6 ohms HF - 8 ohms, LF - 6 ohms
Enclosure Material:	13-Ply Birch Plywood
Grille:	Powder-Coated 16-GA Steel, Fabric Backed
Input connectors:	(2) Neutrik Speakon NL4’s
Dim (H x W x D):	15.5" x 39.0" x 14.9" (394mm x 990mm x 378mm)
Net Weight:	84 lbs (38 kg)
Shipping Weight:	92 lbs (42 kg)

[1] Full Space
[2] Half Space

Electro-Voice®

Frequency Response and Impedance:

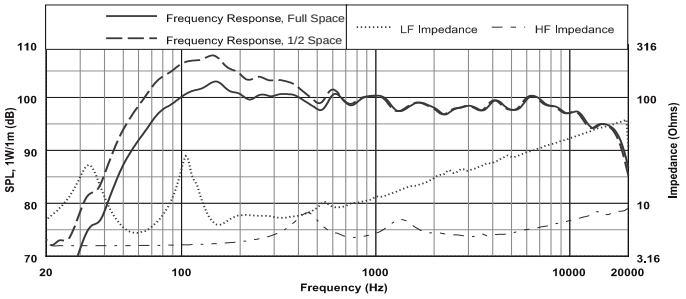

Horiz. Off Axis Frequency Response (left):

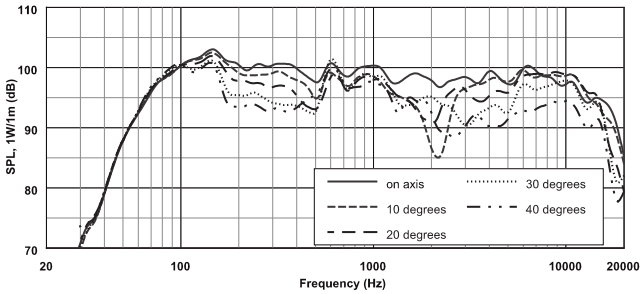

Beamwidth:

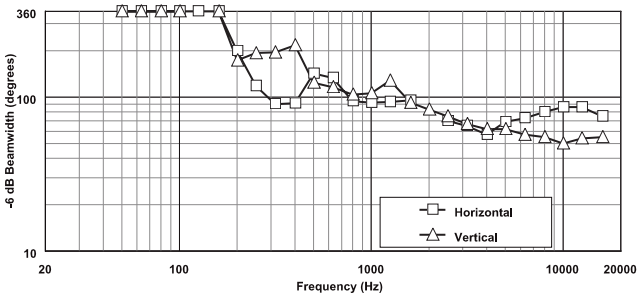

Horiz. Off Axis Frequency Response (right):

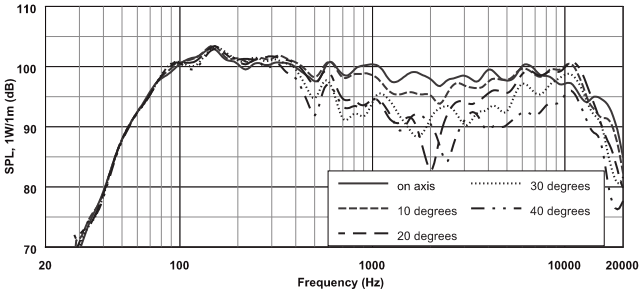

Directivity:

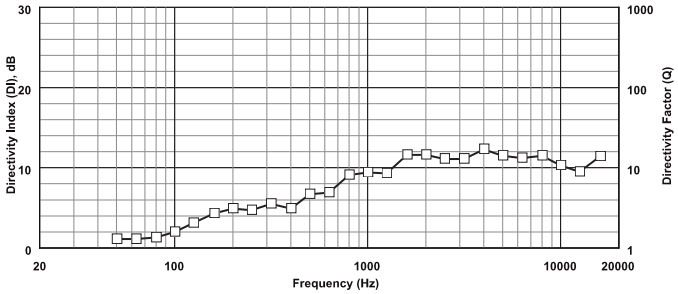

Vertical Off Axis Frequency Response (down):

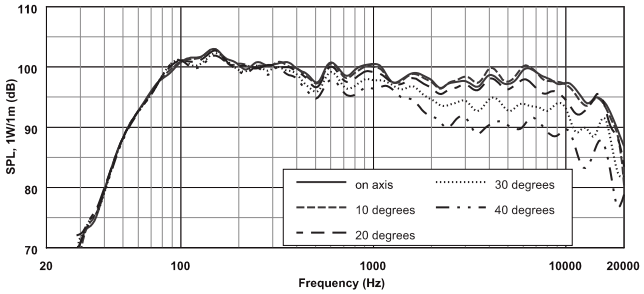

Block Diagram:

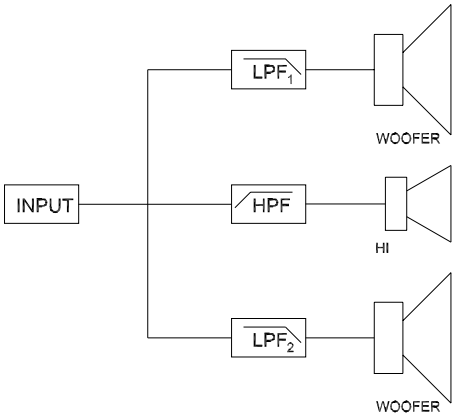

Horizontal 1/3 Octave Polars:

Vertical 1/3 Octave Polars:

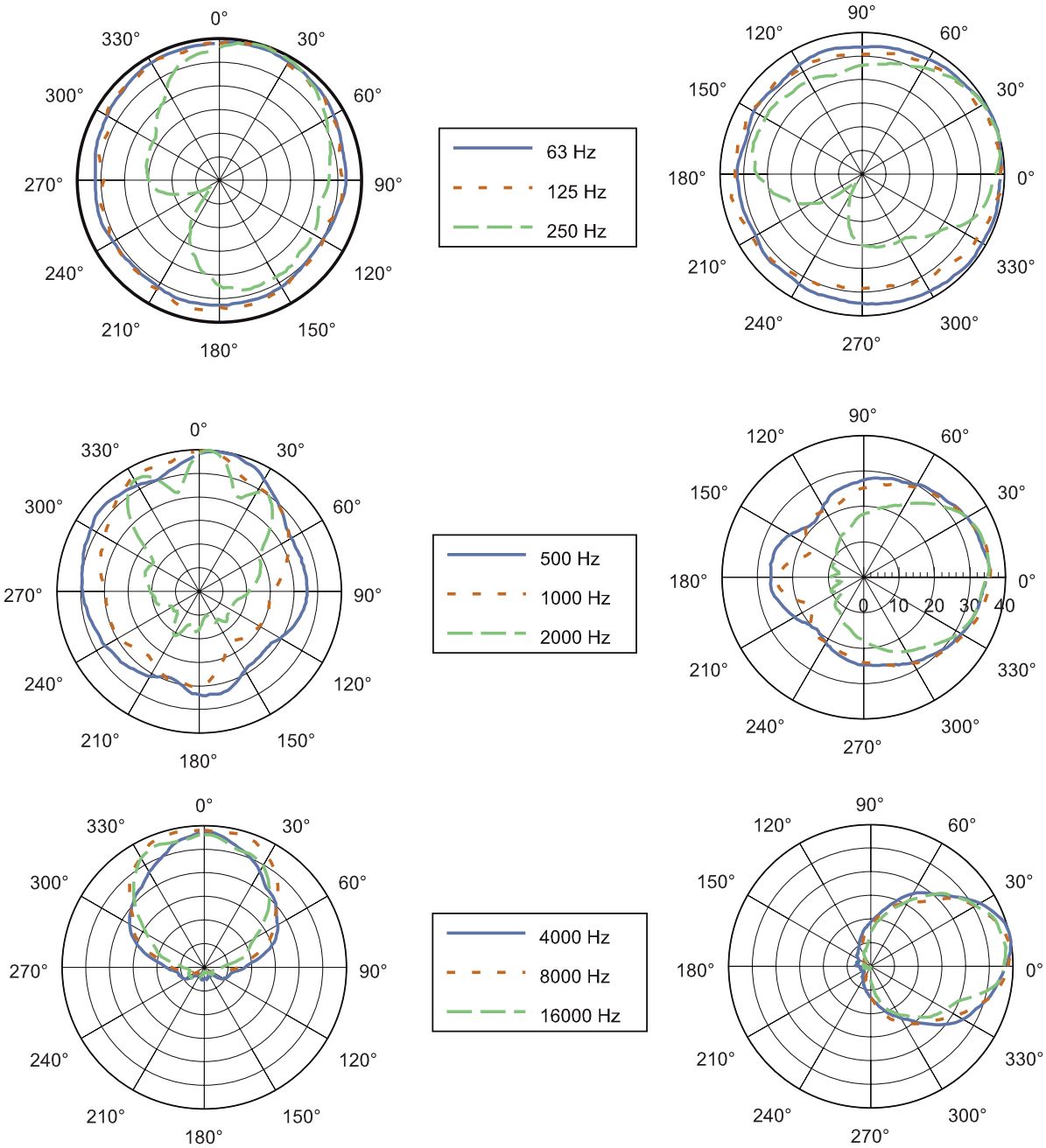

Dimension Drawings:

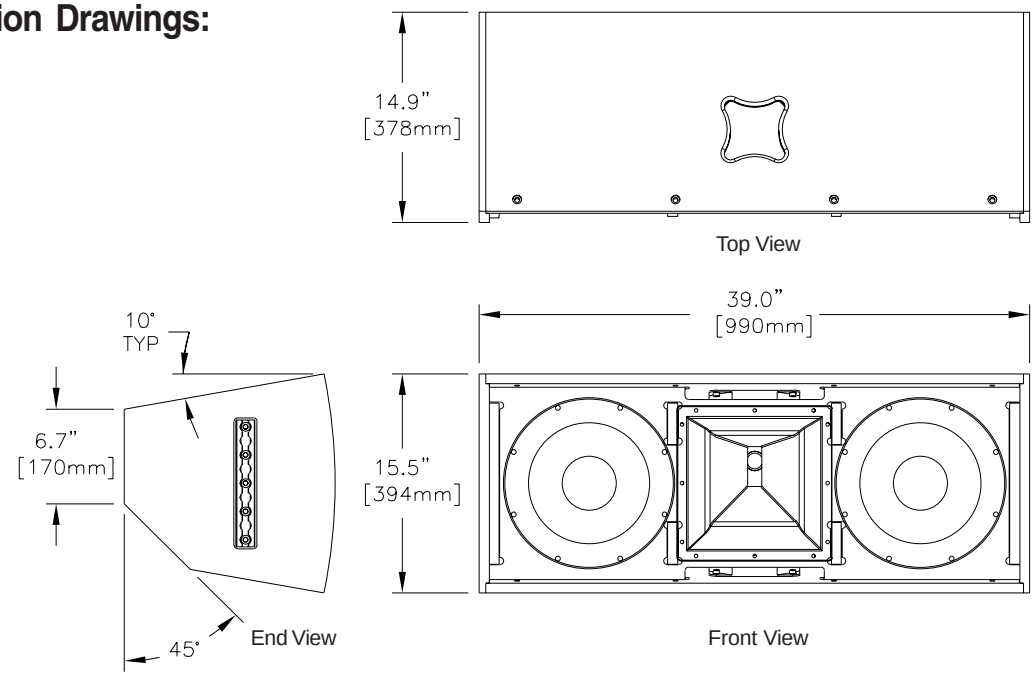

Architectural & Engineering Specs:

The two-way, full-range loudspeaker system shall incorporate two 12-inch transducers as the LF components and once 3-inch diameter voice coil/diaphragm compression driver as the HF component. The compression driver shall be mounted on a 75-degree x 50-degree asymmetrical constant directivity horn with a factory delivered position of 15 degrees up/35 degrees down/50 degrees horizontal configuration. The horn shall be constructed of a material and design to allowing a full 360-degree rotation of the horn. The input panel shall incorporate a switch, allowing external configuration between biamped or passive operation. Input connections shall be accommodated with two paralleled NL4 female Speakon® connectors. A 16 ga powder-coated fabric-backed perforated steel grille shall cover the front of the system. Loudspeaker system frequency response shall be no less than 52 Hz to 18 kHz (-10 dB) measured on axis. The loudspeaker shall produce a sound pressure level (SPL) of 100 dB on axis at 1 meter with a power input of 1 watt and shall be capable of sustaining a full power, long-term average output of 127 dB on axis at 1 meter (133 dB peaks). The full-range system, with passive network engaged, shall handle 600 watts of amplified power long-term in compliance with AEA-EIA standards and have a nominal impedance of 6 ohms. The loudspeaker enclosure shall be constructed of 13-ply voidfree cross-grain-laminated Birch plywood. It shall be finished in black or white EVCoat™, or available unfinished. It shall have a 5 sided shape. The top and bottom of the enclosure shall have L-track rigging. Three single studded ancra fittings rated for overhead use shall be included with each loudspeaker system. Fittings shall include a tethered safety pin to ensure proper installation.

The two-way full-range loudspeaker system shall be the Electro-Voice model QRx212H.

WARNING: Suspending any object is potentially dangerous and should only be attempted by individuals who have a thorough knowledge of the techniques and regulations of rigging objects overhead. Electro-Voice® strongly recommends that QRx speakers be suspended taking into account all current national, federal, state and local regulations. It is the responsibility of the installer to ensure that QRx speakers are safely installed in accordance with all such regulations. If QRx speakers are suspended, Electro-Voice® strongly recommends that the system be inspected at least once a year. If any sign of weakness or damage is detected, remedial action should be taken immediately.

Performance Match:

- EV P1202 Modular Precision Amplifier
- M212 Processing Module
- EV P3000 Precision Series Amplifier
- Dx38 Digital Sound System Controller

Accessories:

- SST-1 Single-Stud Rigging Fitting

QRx212H Part Numbers:

- 301411-001 QRx212H, Black EVCoat™ finish
- 301411-002 QRx212H, White EVCoat™ finish

Electro-Voice®

12000 Portland Avenue South, Burnsville, MN 55337
Phone: 952/884-4051, Fax: 952/884-0043

www.electrovoice.com

© Telex Communications, Inc. 5/2005

Part Number 38110-267 Rev. C

U.S.A. and Canada only. For customer orders, contact Customer Service at:
800/392-3497 Fax: 800/955-6831
Europe, Africa, and Middle East only. For customer orders, contact Customer Service at:
+ 49 9421-706 0 Fax: + 49 9421-706 265
Other International locations. For customer orders, contact Customer Service at:
+ 1 952 884-4051 Fax: + 1 952 736-4212
For warranty repair or service information, contact the Service Repair department at:
800/685-2606
For technical assistance, contact Technical Support at: **866/78AUDIO**

Specifications subject to change without notice.