Electro-Voice®

N/D 408B

Supercardioid Dynamic Instrument Microphone

SPECIFICATIONS

Frequency Response,
Close Response:
30 to 22,000 Hz
Far Response:
60 to 22,000 Hz
Polar Pattern:
Supercardioid
Open Circuit Voltage:
3.1 mV/pascal @ 1,000 Hz
Power Sensitivity:
-51 dB @ 1,000 Hz
(0 dB = 1 mW/pascal)
Dynamic Range:
144 dB
Equivalent Output Noise:
14 dB
(0 dB = 0.0002 dynes/cm²)
Impedance:
150 ohms balanced (lo-Z)
Weight:
6.7 ounces (190 grams)
Dimensions,
Height: 4.55 in. (115 mm)
Width: 2.85 in. (72 mm)
Length: 2.75 in. (70 mm)

FREQUENCY RESPONSE

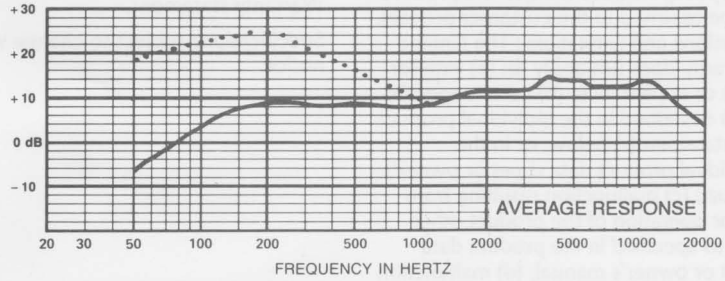

See "Certificate of Performance" (provided with microphone) for actual response

• • • • Close Response

The Electro-Voice N/D408B is a supercardioid, dynamic microphone ideally suited to mic percussion, guitar amp and horns for live performance and studio recording. The unique pivoting yoke configuration provides the maximum flexibility in positioning the microphone. The N/D408B utilizes a revolutionary neodymium alloy to form the EV-exclusive N/DYM® magnet. With a computer-optimized design, the N/DYM magnetic structure is maximized in the N/D408B to provide 6-dB more output sensitivity over conventional designs while the more uniform magnetic field lowers distortion during peak sound pressure levels.

The N/DYM magnet geometry combined with a reinforced diaphragm design forms a smooth, extended frequency response with a warm, open, transparent sound quality only found in studio quality microphones. The N/D408A also utilizes a hum-bucking coil to reduce hum from lighting and other power sources.

N/DYM Series III microphones feature the AcoustiDYM™ shock-mount system. This unique vibration-isolation system works as a multistage device. At low-frequencies, a rear sound wave cancels the diaphragm motion, while at high frequencies the specially designed rubber shock mount isolates the transducer from motion. Combining AcoustiDYM with the elastomeric Warm-Grip™ handle and windscreen bumper forms an advanced technology vibration-isolation system which dramatically reduces all forms of handling noise for the most demanding situations.

The N/D408B has a supercardioid polar pattern. Compared to the more traditional, heart-shaped cardioid pattern, a supercardioid pattern rejects more sound at the sides and rear overall. These characteristics tend to reduce feedback under live performance conditions, particularly with typical monitor speaker placements. Also, the N/D408's polar patterns are unusually uniform with frequency, insuring superior gain-before-feedback in live applications and superior isolation in the studio.

The N/DYM Series III pop filter is a unique design utilizing a combination of

N/DYM® III

N/D 408B

POLARS

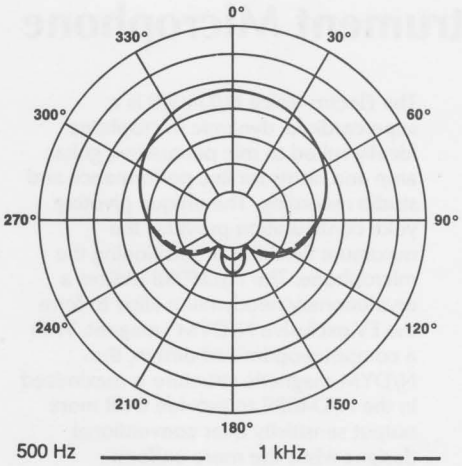

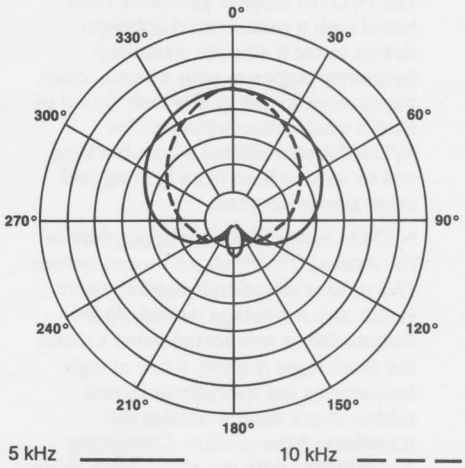

two materials—Acoustifoam™ and a high-density-fabric—to form a material composite which maximizes rejection of both wind noise and vocal P-pops. This design makes the pop filter an integral part of the microphone's removable front grille assembly, allowing easy cleaning for continued top performance.

OPERATION

The N/D408B represents a radical departure from conventional instrument microphone designs. The unique pivoting yoke configuration allows maximum flexibility in positioning the microphone near a sound source.

The low-frequency response of the N/D408B can be extended by positioning the microphone closer to the sound source as documented in the specification section. This proximity effect occurs when the microphone is placed within 12 inches of the sound source and increases as the working distance is reduced. The low-frequency response is tailored to provide bass boost without the "boominess" of many directional microphones. Thus, closer working distances can be used with N/D408B to reduce the risk of sound system feedback (ringing) while preserving instrument tonality.

The dynamic element of the N/D408B will provide reliable operation in humidity and temperature extremes-adverse conditions that would render condenser microphones useless. For years of trouble-free operation "on-the-road," the N/D408B utilizes an all-metal-core construction, from the hardened windscreen to the yoke-mounting system. (U.S. Patent Numbers 4,745.020, 4,824,715, and 4,646,873)

CERTIFIED PERFORMANCE

Every N/D408B is inspected by a quality-control tester and subjected to a computer-controlled test system that verifies many different performance parameters. After the performance meets or exceeds our rigorous standards, the actual measured frequency response of the unit tested is plotted on a "Certificate of Performance" and included with the microphone. Certified Performance response may vary from published "Average Response." This certificate guarantees that each N/D408B will perform to the exacting standards established by EV design engineers — **100% quality-assurance testing.**

WARRANTY (Limited) —

Electro-Voice products are guaranteed against malfunction due to defects in materials or workmanship for a specified period, as noted in the individual product-line statement(s) below, or in the individual product data sheet or owner's manual, beginning with the date of original purchase. If such malfunction occurs during the specified period, the product will be repaired or replaced (at our option) without charge. The product will be returned to the customer prepaid. Exclusions and Limitations: The Limited Warranty does not apply to: (a) exterior finish or appearance; (b) certain specific items described in the individual product-line statement(s) below, or in the individual product data sheet or owner's manual; (c) malfunction resulting from use or operation of the product other than as specified in the product data sheet or owner's manual; (d) malfunction resulting from misuse or abuse of the product; or (e) malfunction occurring at any time after repairs have been made to the product by anyone other than Electro-Voice or any of its authorized service representatives. Obtaining Warranty Service: To obtain warranty service, a customer must deliver the product, prepaid, to Electro-Voice or any of its authorized service representatives together with proof of purchase of the product in the form of a bill of sale or receipted invoice. A list of authorized service representatives is available from Electro-Voice at 600 Cecil Street, Buchanan, MI 49107 (616/695-6831) and/or Electro-Voice West, at 8234 Doe Avenue, Visalia, CA 93291 (209/651-7777). Incidental and Consequential Damages Excluded: Product repair or replacement and return to the customer are only remedies provided to the customer. Electro-Voice shall not be liable for any incidental or consequential damages including, without limitation, injury to persons or property or loss of use. Some states do not allow the exclusion or limitation of incidental or consequential damages so the above limitation or exclusion may not apply to you. Other Rights: This warranty gives you specific legal rights, and you may also have other rights which vary from state to state.

Electro-Voice N/D, PL, BK, and Professional Microphones are guaranteed against malfunction from any cause for two (2) years from the date of original purchase. In addition, the Limited Warranty for the acoustic system contained in these microphones shall apply for the life of the product, defined as a period of ten (10) years from the date that the manufacture of the specific microphone has been discontinued. Any and all active electronics incorporated in these microphones are guaranteed against malfunction due to defects in materials or workmanship for a period of three (3) years from the date of original purchase. The Limited Warranty does not extend to cables, cable connectors, or switches. Additional details are included in the Uniform Limited Warranty statement.

Specifications subject to change without notice.

ELECTRO-VOICE, INC., 600 Cecil Street, Buchanan, Michigan 49107

MANUFACTURING PLANTS AT ■ BUCHANAN, MI ■ NEWPORT, TN ■ SEVIERVILLE, TN ■ OKLAHOMA CITY, OK ■ GANANOQUE, ONT.

©Electro-Voice Inc. 1992

■ Litho in U.S.A.

a MARK IV company

Part Number 531818 — 201