KEY FEATURES

- **15-inch Two-way High-output Stage System**
- **350 Watts Continuous**
- **RMD™ for Improved Clarity and Presence**

Eliminator i™

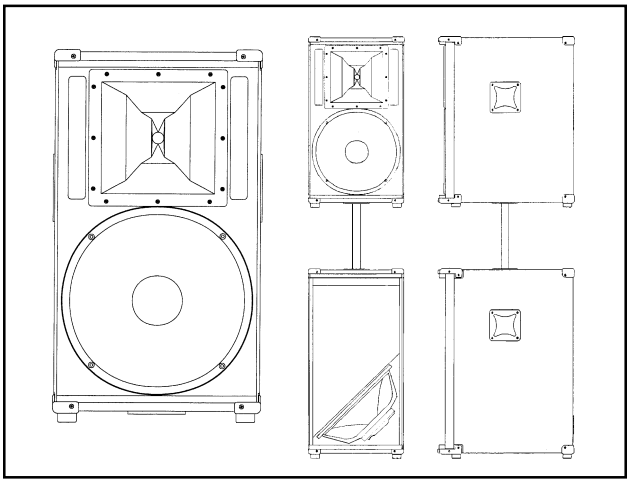

General Product Description

The Electro-Voice Eliminator i™ is a high-peak output, high-efficiency two-way stage system. The 15-in. low-frequency/horn-loaded constant-directivity high-frequency system incorporates elements of Ring-Mode Decoupling (RMD™). RMD techniques substantially improve vocal fundamental intelligibility and produce an "up front" tonality capable of cutting through even difficult acoustic environments.

The Eliminator i™ enclosure has a unique design that presents a very minimal frontal cross section while still maintaining substantial internal volume. A newly developed handle concept allows for extremely comfortable transportation from any orientation. The design is light weight, but very rugged and features a heavy metal grille and highly stylized corner protection.

The heart of Eliminator i™'s high performance design is the combination of a high-excursion low-frequency suspension system with Electro-Voice's unique Ring-Mode Decoupling. All loudspeaker drivers exhibit mechanical resonance modes that add their own time-domain or ringing-mode colorations. These colorations limit and reduce overall system intelligibility. The Eliminator i™ uses RMD™ to control several fundamental mechanical ringing modes. The result is substantially improved vocal range intelligibility and system "openness". When extended low-frequency operation is required, the performance can be further enhanced with the use of the Eliminator i™ Sub, which can be used in either biamp or full-range passive mode. Vented enclosures offer excellent power handling and low distortion in the lowest octave of rated operation. However, it is always advisable to filter material below enclosure tuning to further improve system output and headroom. The Eliminator i™ should be high-pass filtered to reduce subsonic material below 40 Hz.

Architects' and Engineers' Specifications

The loudspeaker system shall consist of a 38.1-cm (15-inch) low-frequency transducer in a vented enclosure. The high-frequency section shall be a compression driver with a pure titanium diaphragm coupled to a 1-inch throat diameter to a constant-directivity horn having a horizontal included angle (as referenced to -6 dB) of 60° and a vertical included angle of 40° nominal. The loudspeaker shall have a rated frequency response of 50 Hz to 20 kHz ±3 dB and a long-term rated average power handling of 350 watts (EIA RS-426-A). The system sensitivity shall be 99 dB when measured in an anechoic environment with a 1-watt input with a calibrated measurement microphone located 1 meter from the system axis. The nominal impedance shall be 8 ohms. The system shall have parallel 1/4-in. phone jacks. The system shall include a 1 3/8-in. stand-mount adapter.

Specifications:

Frequency Response, Measured at 10 feet on axis (normalized to 1 watt/ 1 meter):
..... 50 - 20,000 Hz ±3 dB

Long-Term Average Power Handling, EIA Standard RS-426-A:
..... 350 watts

Sound Pressure Level, 1 W/1 m: ..... 99 dB

Dispersion Angle Included by 6-dB Down Points on Polar Responses, Indicate One-Third-Octave Bands of Pink Noise,
2,500 Hz - 20,000 Hz, Horizontal: ..... 60° (+14°, -25°)
2,500 Hz - 20,000 Hz, Vertical: ..... 40° (+12°, -0°)

Transducer Complement:
High Frequency:
DH2010A
HP64M constant directivity
Low Frequency:
DL15BFH

Enclosure Tuning: ..... 50 Hz

Crossover frequency: ..... 1600 Hz

Impedance:
Nominal ..... 8 ohms
Minimum ..... 5.3 ohms

Input connectors:
Parallel 1/4-inch phone jacks

Enclosure Finish: ..... Black carpeted

Dimensions,
Height: ..... 76.8 cm (30.25 in.)
Wide: ..... 42.9 cm (16.9 in.)
Depth: ..... 60.9 cm (24 in.)

Net Weight: ..... 34.4 kg (76 lbs)

Shipping Weight: ..... 38.1 kg (84 lbs)

Supporting Products
100BK speaker stand
Eliminator i™ Sub
Eliminator i™ Amplifier

Electro-Voice®

Power-Handling Capacity

Electro-Voice components and systems are manufactured to exacting standards, ensuring they will hold up, not only through the most rigorous of power tests, but also through continued use in arduous, real-life conditions. The EIA Loudspeaker Power Rating Full Range (ANSI/EIA RS-426-A 1980) uses a noise spectrum that mimics typical music and tests the thermal and mechanical capabilities of the components. Electro-Voice will support relevant additional standards as and when they become available. Extreme, in-house power tests, which push the performance boundaries of the woofers, are also performed and passed to ensure years of trouble-free service.

Specifically, the Eliminator i™ passes ANSI/ EIA RS-426-A 1980 with the following values:

R_{SR} = 5.175 ohms (1.15 x R_E)
$P_{E(MAX)}$ = 350 watts
Test voltage = 42.55 volts rms,
85.10 volts peak (+6 dB)

The "peak" power-handling capacity of a woofer is determined by the peak test voltage amount. For the Eliminator i™ a 85.10-volt-peak-test voltage translates into 1,400-watts short-term peak power-handling capacity. This is the equivalent of four times the "average" power-handling capacity, and is a peak that can be sustained for only a few milliseconds. However, this sort of short duration peak is very typical in speech and music. Provided the amplifier can reproduce the signal accurately, without clipping, the woofer will also perform accurately and reliably, even at these levels.

Amplifier Recommendations

The power-handling rating of the Eliminator i™ is 350-watts continuous. The specific tests used employ a crest factor (ratio of peak energy to continuous energy of at least 6 dB). During extended testing, the Eliminator i™ is routinely subjected to peak levels far in excess of its continuous rating of 350 watts. Many amplifier designs are capable of producing peak power levels in excess of their ratings as well, so exact "pairing" of loudspeaker rating and amplifier ratings is not necessary. Amplifier continuous ratings of 250 watts to 400 watts are suggested. Larger amplifier ratings are recommended for maximum dynamic range, but it should be recommended that amplifier continuous levels (as opposed to peak levels) be within the range quoted for the Eliminator i™ long-term average power-handling rating.

Stand Mounting

The Eliminator i™ is equipped with an internal stand-mount adapter that will accommodate standard 1 3/8-in. diameter speaker stands.

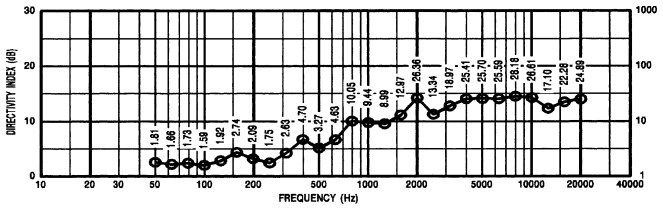

Directivity (Anechoic)

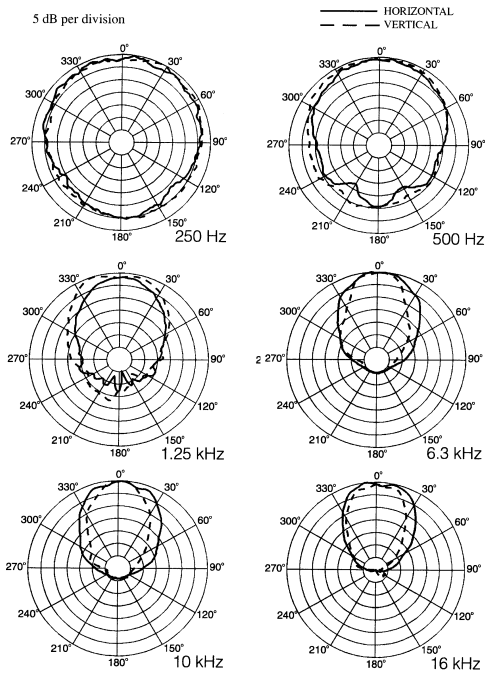

Polars

Frequency Response

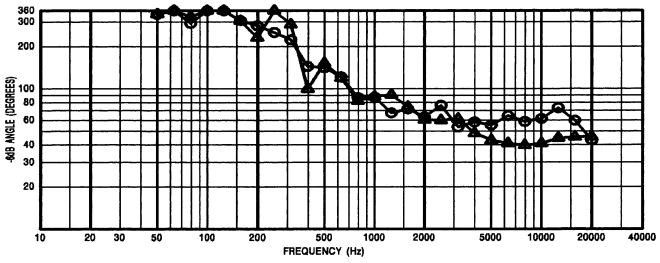

Beamwidth Response (Anechoic)

USA	12000 Portland Ave South, Burnsville, MN 55337, Phone: 952-884-4051, Fax: 952-884-0043
Canada	705 Progress Avenue, Unit 46, Scarborough, Ontario, Canada, M1H2X1, Phone: 416-431-4975, 800-881-1685, Fax: 416-431-4588
Germany	Hirschberger Ring 45, D94315, Straubing, Germany, Phone: +49 9421-706 0, Fax: +49 9421-706 287
France	Parc de Courcerin, Allee Lech Walesa, Lognes, 77185 Marne la Vallee, France, Phone: +33 1 6480-0090, Fax: +33 1 6480-4538
Australia	Unit 23, Block C, Slough Business Park, Slough Avenue, Silverwater, N.S.W. 2128, Australia, Phone: +61 2-9648-3455, Fax: +61 2-9648-5585
Hong Kong	Unit E & F, 21/F, Luk Hop Industrial Bldg., 8 Luk Hop St., San PO Kong, Kowloon, Hong Kong, Phone: +852-2351-3628, Fax: +852-2351-3329
Japan	5-3-8 Funabashi, Setagaya-ku, Tokyo, 156-0055 Japan, Phone: +81 3-5316-5020, Fax: +81 3-5316-5031
Singapore	3015A Ubi Rd 1,05-10, Kampong Ubi Industrial Estate, Singapore 408705,Phone: +65-746-8760, Fax: +65-746-1206
Mexico	Av. Parque Chapultepec #66-201, Col. El Parque Edo. De Mexico 53390, Mexico, Phone: +52 5358-5434, Fax: +52 5358-5588
UK	4, The Willows Centre, Willow Lane, Mitcham,Surrey CR4 4NX, UK, Phone: +44 181 640 9600, Fax: +44 181 646 7084
Africa,Mid-East	Hirschberger Ring 45, D94315, Straubing, Germany, Phone: +49 9421-706 0, Fax: 49 9421-706 287
Latin America	12000 Portland Ave South, Burnsville, MN 55337, Phone: 952-887-7491, Fax: 952-887-9212

www.electrovoice.com • Telex Communications, Inc. • www.telex.com

Part Number 38109-936 Rev C

Electro-Voice®

U.S.A. and Canada only.
For customer orders, contact the Customer Service department at 800/392-3497 Fax: 800/955-6831
For warranty repair or service information, contact the Service Repair department at 800/685-2606
For technical assistance, contact Technical Support at 866/78AUDIO
Please refer to the Engineering Data Sheet for warranty information.
Specifications subject to change without notice.