Electro-Voice®

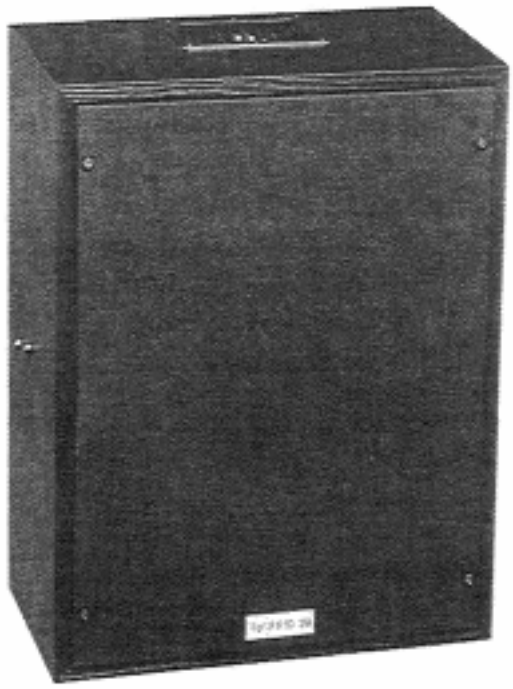

FR10-2B

High-Output, Two-Way Cinema Surround Speaker System

- **High output—complements the potential of digital sound on film**
- **THX® approved[1] for cinema applications**
- **94-dB sensitivity**
- **100 watts long-term power capacity**
- **Easy suspension**
- **OmniMount® Series 100 compatible[2]**
- **ISO 2969 treble roll-off (switchable)**
- **Input panel on top surface for easy access**

1 THX is a registered trademark of Lucasfilm Ltd.
2 OmniMount® is a registered trademark of OmniMount Systems.

Description

The Electro-Voice FR10-2B is a compact two-way, high-efficiency speaker system. Its primary intended application is for high-quality surround sound in premium cinema installations, and it has been designed with the rigors of a digital signal source in mind. High-quality, professional-level components are used throughout the design, including a Super-Dome™ high-frequency driver and a professional-grade woofer. The black oak-grain vinyl has been selected to blend into most interior design concepts and is complemented with a black cloth grille attached with four screws.

A second-order (12-dB-per-octave) crossover at 2,125 Hz is used to separate the two frequency sections and provide equalization for the Super-Dome™ tweeter. The bass section was designed for efficient low-end performance in a compact enclosure.

Frequency Response

The FR10-2B axial frequency response was measured in Electro-Voice's large anechoic chamber at a distance of 10 feet with a swept sine-wave input (see Figure 1). The two responses ISO 2969 and "flat," are illustrated.

Directivity

The directional characteristics of the FR10-2B were measured in Electro-Voice's large anechoic chamber. The test signal was one-third-octave filtered pink noise at the frequencies indicated. A full spherical measurement system was used. All directional information was measured at 20 feet.

Figure 2 illustrates the horizontal and vertical polar responses.

Figure 3 shows the horizontal and vertical beamwidths. Beamwidth is the angle at which the horizontal and vertical polar responses have decreased in level by 6 dB when compared with the axial frequency response.

Figure 4 illustrates the total directivity of the FR10-2B. The directivity factor $R_\theta(Q)$ is the relative value, at a point, of the FR10-2B's output when compared to an ideal spherical response. The directivity index, D_i, is calculated by $D_i = 10\log_{10}R_\theta$.

Power-Handling Test

Electro-Voice components and systems are manufactured to exacting standards, ensuring they will hold up, not only through the most rigorous of power tests, but also through continued use in arduous, real-life conditions. The EIA Loudspeaker Power Rating Full Range (EIA RS-426-A 1980) uses a noise spectrum which mimics typical music and tests the thermal and mechanical capabilities of the components. Electro-Voice will support relevant additional standards as and when they become available. Extreme, in-house power tests, which push the performance boundaries of the system, are also performed and passed to ensure years of trouble-free service.

Specifically, the FR10-2B passes EIA RS-426-A 1980 with the following values:

$R_{SR} = 6.3\ (1.15 \times R_E)$ ohms
$P_{E(MAX)} = 100$ watts
Test voltage = 25.1 volts rms,
50.2 volts peak

The "peak" power-handling capacity of a woofer is determined by the peak test voltage amount. For the FR10-2B a 50.2-volt peak test voltage translates into a 400-watt short-term-peak power-handling capacity. This is the equivalent of four times the "average" power-handling capacity, and is a peak that can be sustained for only a few milliseconds. However, this sort of short duration peak is very typical in speech and music. Provided the amplifier can reproduce the signal accurately, without clipping, the system will also perform accurately and reliably, even at these levels.

Use in Cinemas

The FR10-2B has features which make it particularly suitable for use in cinema surround sound. It is black to complement most theater interiors. The WCB-2 U-bracket provides a cost-effective and safe method of suspending the FR10-2B at the correct (15°) angle. The high dynamics and high power handling offered by professional-grade components make it especially suitable for digital signals.

Suspending the FR10-2B

The FR10-2B is fitted with ¼-20 threaded inserts and can be suspended in two ways:

1. WCB-2 is a U-bracket designed specifically for the FR10-2B when being used in a cinema installation. It supports the FR10-2B vertically and can be locked at an angle of 15° (see Figure 7).
2. OmniMount® Series 100 support system. Four ¼-20 threaded inserts are located in the rear panel to allow the use of the OmniMount® Series 100 support system. A safety chain should be used to ensure safe operation. (Obtain OmniMount® specifications for full instructions.)

It is the responsibility of the installer to ensure the integrity of the mounting surface. The grille of the FR10-2B is securely attached on the front of the cabinet with four screws.

Architects' and Engineers' Specifications

The loudspeaker system shall be a two-way, full-range design consisting of a 10-inch woofer, a 1½-inch Super-Dome™ tweeter and a passive crossover network installed in a MDF enclosure with a black cloth grille. Finish shall be black vinyl.

The system shall have a crossover point of 2,125 Hz and have a nominal impedance of 8 ohms. Usable frequency range shall extend from 48 Hz to 18,000 Hz. Sensitivity shall be at least 94 dB for a 1 watt input at a distance of 1 meter on axis. Long-term power capacity shall be at least 100 watts, based on ANSI/EIA RS-426-A 1980 standard for full-range loudspeaker systems.

A switch shall be present to allow the ISO 2969 or "flat" response to be selected. The input panel will be located on the top surface.

Input connections shall be #10 screw terminals on a barrier strip. Suspension of the system shall be achieved through the use of the WCB-2 U-bracket (for vertical suspension at 15°), or the OmniMount® Series 100 support system; four ¼-20 threaded inserts shall be located in the rear panel of the speaker enclosure to accommodate the OmniMount hardware.

Overall dimensions shall be no greater than 55.9 cm (22.00 in.) high by 41.9 cm (16.50 in.) wide by 22.2 cm (8.75 in.) deep. Net weight shall be 15.5 kg (34 lb). The system shall be the Electro-Voice FR10-2B.

Uniform Limited Warranty Statement

Electro-Voice products are guaranteed against malfunction due to defects in materials or workmanship for a specified period, as noted in the individual product-line statement(s) below, or in the individual product data sheet or owner's manual, beginning with the date of original purchase. If such malfunction occurs during the specified period, the product will be repaired or replaced (at our option) without charge. The product will be returned to the customer prepaid. **Exclusions and Limitations:** The Limited Warranty does not apply to: (a) exterior finish or appearance; (b) certain specific items described in the individual product-line statement(s) below, or in the individual product data sheet or owner's manual; (c) malfunction resulting from use or operation of the product other than as specified in the product data sheet or owner's manual; (d) malfunction resulting from misuse or abuse of the product; or (e) malfunction occurring at any time after repairs have been made to the product by anyone other than Mark IV Audio Service or any of its authorized service representatives. **Obtaining Warranty Service:** To obtain warranty service, a customer must deliver the product, prepaid, to Mark IV Audio Service or any of its authorized service representatives together with proof of purchase of the product in the form of a bill of sale or receipted invoice. A list of authorized service representatives is available from Mark IV Audio Service at 10500 W. Reno Avenue, Oklahoma City, OK 73127 (800/845/8727 or FAX 405/577-3274). **Incidental and Consequential Damages Excluded:** Product repair or replacement and return to the customer are the only remedies provided to the customer. Electro-Voice shall not be liable for any incidental or consequential damages including, without limitation, injury to persons or property or loss of use. Some states do not allow the exclusion or limitation of incidental or consequential damages so the above limitation or exclusion may not apply to you. **Other Rights:** This warranty gives you specific legal rights, and you may also have other rights which vary from state to state.

Electro-Voice Speakers and Speaker Systems are guaranteed against malfunction due to defects in materials or workmanship for a period of five (5) years from the date of original purchase. The Limited Warranty does not apply to burned voice coils or malfunctions such as cone and/or coil damage resulting from improperly designed enclosures. Electro-Voice active electronics associated with the speaker systems are guaranteed for three (3) years from the date of original purchase. Additional details are included in the Uniform Limited Warranty statement.

Specifications subject to change without notice.

Figure 6—Mounting the FR10-2B Using the WCB-2 Bracket

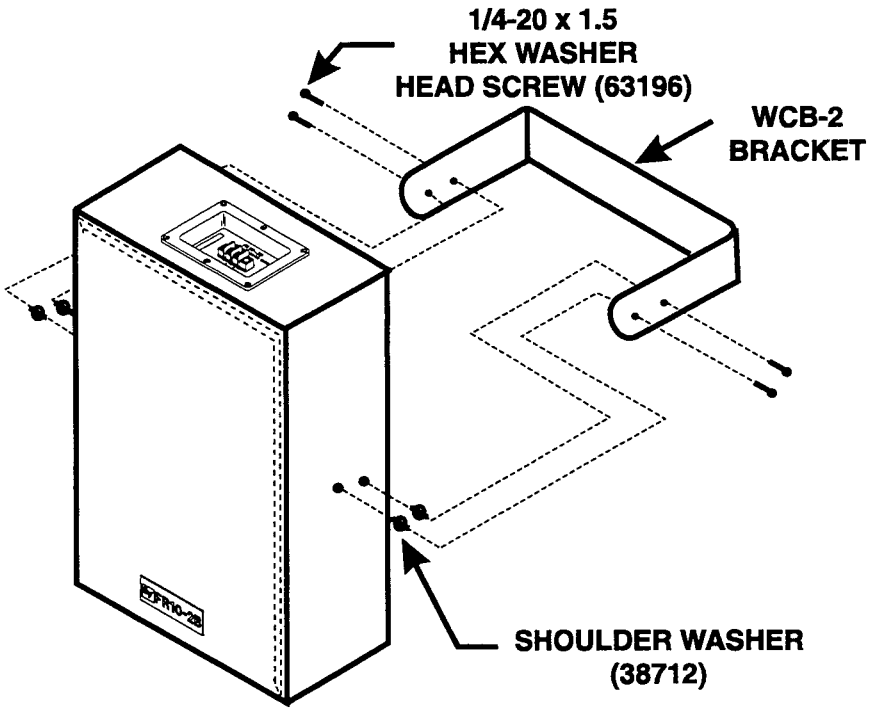

Figure 7—Impedance ("flat" response)

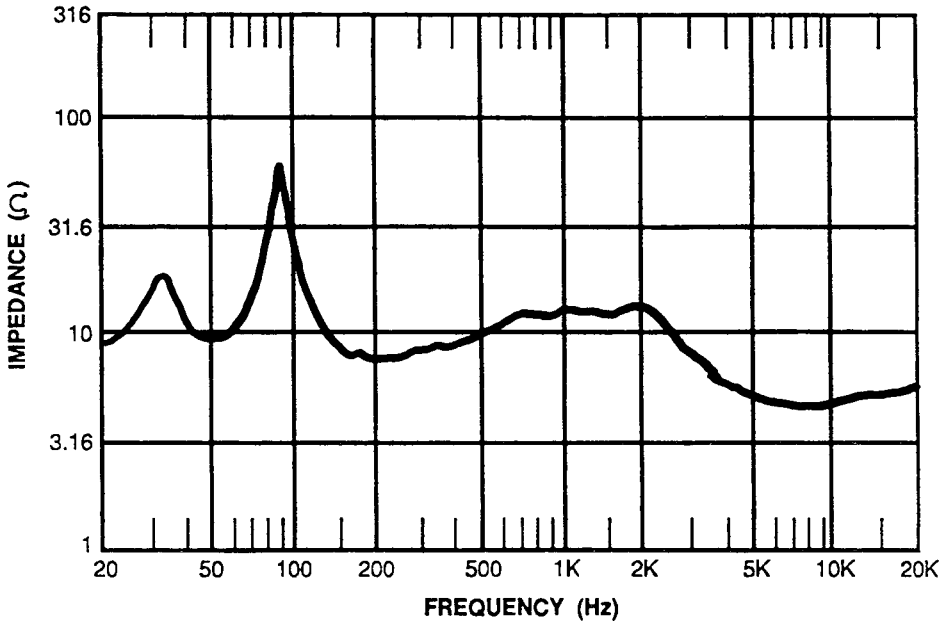

Specifications

Axial Frequency Response (swept sine wave, 4 volts at 10 feet on axis, anechoic environment normalized for 1 watt/1 meter; see Figure 1):
75-18,000 Hz
Low-Frequency 3-dB-Down Point:
75 Hz
Usable Low-Frequency Limit (10-dB-down point):
48 Hz
Half-Space Reference Efficiency:
2.1%
Long-Term Average Power-Handling Capacity (per ANSI/EIA RS-426-A 1980; see Power-Handling Capacity section):
100 watts
Maximum Woofer Acoustic Output:
2.1 watts
Sensitivity (SPL at 1 m, 1 W into nominal impedance, anechoic environment, band-limited pink-noise signal, 100-15,000 Hz):
94 dB
Beamwidth (angle included by 6-dB-down points on polar responses, horizontal and vertical planes, indicated one-third-octave bands of pink noise; see Figure 3),
250-6,300 Hz:
150° ±30°
8,000-18,000 Hz:
60° ±15°
Directivity Factor R_θ (Q), 800- to 16,000-Hz Median (see Figure 4):
8.5 (+12.5, –4.0)
Directivity Index D_i, 800- to 16,000-Hz Median (see Figure 4):
7 dB (+3.5 dB, –2.5 dB)
Distortion, 0.1 Full Power Input (see Figure 5),
Second Harmonic,
100 Hz:
<1%
1,000 Hz:
4%
10,000 Hz:
3%
Third Harmonic,
100 Hz:
1%
1,000 Hz:
<1%
10,000 Hz:
<1%
Transducer Complement,
Low-Frequency:
10-inch woofer
Low-Frequency:
1½-inch Super-Dome™ tweeter
Box Tuning Frequency:
50 Hz
Crossover Frequency:
2,125 Hz
Crossover Slope:
12 dB per octave
Impedance,
Nominal:
8 ohms
Minimum:
6.7 ohms
Response:
ISO 2969/Flat (in/out) Switchable
Input Connections:
Screw terminals (#10) on barrier strip
Enclosure Materials and Colors:
Paintable, black vinyl-clad enclosure constructed of MDF (medium density fiberboard)
Grille:
Black cloth on wood frame, permanently attached
Suspension (see Suspending the FR10-2B section):
WCB-2 cinema wall bracket
OmniMount® Series 100 support system
Optional Accessories:
WCB-2 cinema wall bracket
Dimensions,
Height:
55.9 cm (22.00 in.)
Width:
41.9 cm (16.50 in.)
Depth:
22.2 cm (8.75 in.)
Net Weight:
15.5 kg (34 lb)
Shipping Weight:
17.3 kg (38 lb)

Electro-Voice®

600 Cecil Street, Buchanan, MI 49107
800/234-6831, 616/695-6831, 616/695-1304 Fax

Part Number 534062 – 9644