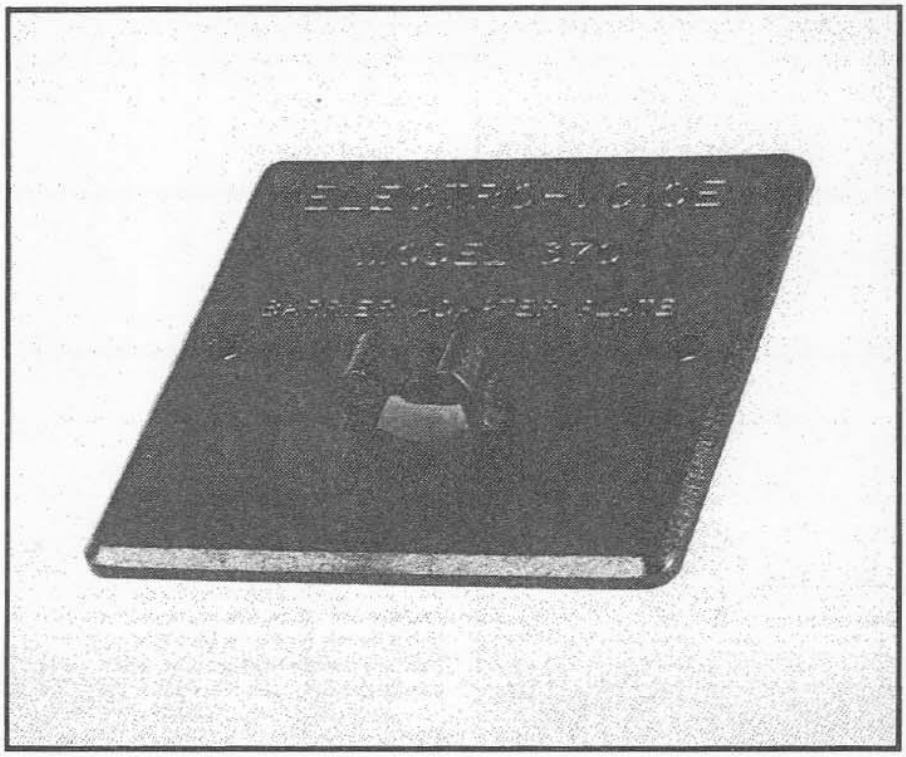

Electro-Voice®
a MARK IV company

Model 370
Barrier Adapter Plate

SPECIFICATIONS

Size:
63.5 mm (2.50 in.) wide,
63.5 mm (2.50 in.) high,
3.2 mm (0.125 in.) thick

Weight:
11 grams (0.4 oz)

Material:
Glass reinforced polycarbonate

Color:
Non-reflecting black

DESCRIPTION AND APPLICATIONS

The Electro-Voice Model 370 Barrier Recording Adapter is a convenient and acoustically optimized surface mounting clamp for Electro-Voice CO94, CO90 and CO90P microphones. It is made of glass-reinforced polycarbonate which assures exceptional strength and long term reliability.

A spring-like clamp on the top surface of the 370 securely retains the microphone, yet permits easy installation and removal. A recess in the 370's surface positions the microphone in the proper location to receive direct and reflected sound waves in phase.

The 370 has provisions for permanent mounting. Two holes permit mounting via screws or small bolts. If the use of screws is undesirable, the bottom surface has been recessed to permit use of foam tape adhesive strips.

Since the microphone can be easily removed and reinstalled, a number of 370 clamps can be installed and the microphone moved from clamp to clamp as need dictates. Easy removal also permits "lock up" of the microphone between uses without loss of the desired in-use position.

INSTALLATION AND REMOVAL OF MICROPHONE

The 370 is designed to securely retain the microphone so that when used in wall and ceiling positions the weight of the cable will be supported with no danger of microphone slippage. In order to reduce the stress placed on the microphone's cable during installation and removal, the following procedures are recommended.

To install a microphone in the 370, align the microphone so the recess and the microphone are facing in the same direction (see Figure 2A). Move the microphone so the cable end of the microphone is in the clamp arms. Simply push the microphone back towards the rear of the clamp (see Figure 2B). The microphone will angle downward at first, then snap into place with a loud click (see Figure 2C).

To remove a microphone from the 370, gently lift the cable end of the microphone and push firmly on the head. (Note: do not pull on the cable.) The microphone will move toward the rear of the clamp angling upward (see Figure 2D). Continue to apply pressure until the microphone is free of the clamp arms.

THE BARRIER RECORDING CONCEPT

When a microphone is placed in a location that receives nearly as much reflected sound as direct sound, the two sound waves can interfere (see Figure 3A). The resulting frequency response typically exhibits a series of deep dips resembling a comb. If a microphone is mounted in direct contact with the surface producing the majority of the reflected sound, the reflected sound and the direct sound will arrive at the same time (see Figure 3B). Since the two are in phase with each other, they cannot destructively interfere. As a result, two desirable conditions exist. First, the frequency response of the microphone is restored to normal. Second, the apparent sensitivity of the microphone is increased by the addition of the two signals. If the barrier producing the reflection is a "good" sonic reflector, the additional output can be nearly 6 dB greater.

If the high frequency response is to be unaltered, the microphone must be physically small when compared to the wavelength of the highest frequency of interest. Larger microphones have unavoidable "baffle effect" which increases the on-axis sensitivity of the microphone at high frequencies. When barrier mounted, the "baffle effect" is proportionately reduced, producing a relative loss in high frequency energy.

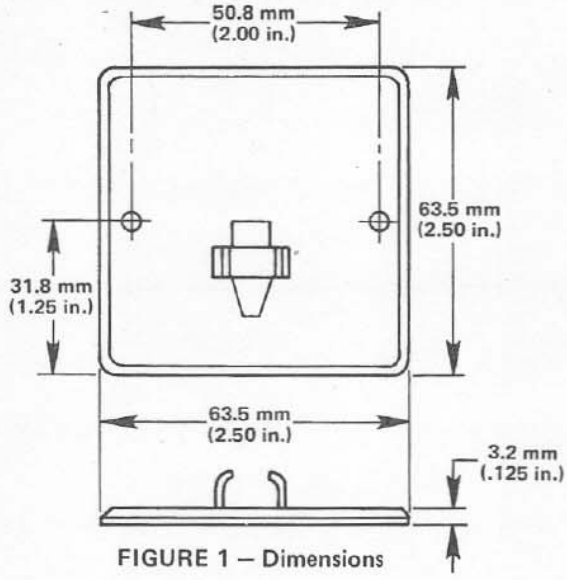

FIGURE 1 – Dimensions

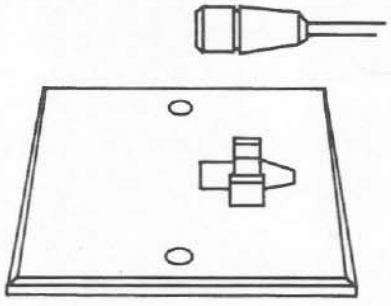

FIGURE 2A – Microphone Alignment

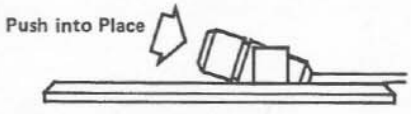

FIGURE 2B – Microphone Installation

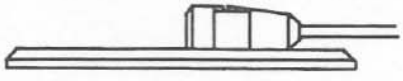

FIGURE 2C – Normal Operating Position

FIGURE 2D – Removal from Clamp

Electro-Voice Models CO94, CO90, and CO90P meet all of the criteria required for proper operation when surface mounted via Model 370 clamp. Their response does not depend on any "baffle effects" to achieve high-frequency sensitivity and, when mounted in the 370's recess, they receive the direct and reflected sounds in nearly perfect phase alignment.

POINTS TO CONSIDER

While there are many situations in which the use of an omnidirectional microphone surface mounted on a large reflecting barrier can produce superior results, it is not always the best option. If, for example, a close-to-source microphone position is possible in which the direct sound is increased to a value approximately three times the level of the strongest reflected sound, the problems that are "cured" by the use of the barrier mounting will not exist in the first place. The closer position will provide higher output with less pick-up of "room ambience". Such a position also allows the freedom to select microphones on the basis of other performance characteristics such as directionality, transducer type, etc.

Because barrier miking is typically a distant miking technique, the overall signal-to-noise ratio of the system will be greatly influenced by both the S/N ratio of the particular microphone in use and the microphone's inherent sensitivity. A low output microphone, for example, may easily require so much additional gain that the recorder or mixer's own noise becomes a problem. The Electro-Voice CO94's exceptional sensitivity and signal-to-noise ratio makes it a logical choice for use with the 370 in the barrier miking mode.

The "advantages" associated with barrier mounting are based on the assumption that the reflected sound is nearly identical to the direct sound. Carpeted floors, drapes, acoustic tile, etc., alter the frequency content of the reflected sound. Barrier miking on sound absorbing surfaces can produce undesirable results because of the increased contribution of the acoustically deformed reflected signal relative to the undisturbed direct signal. While covering the absorptive mounting surface may be possible, the alternative of a close miking technique is often a more logical approach.

It should also be noted that the positioning of a microphone adjacent to one barrier does nothing to negate the effects of reflections resulting from any other reasonably close barrier (see Figure 4).

The barrier should be large with respect to the lowest frequency of interest. A small surface is not large enough to reflect a low-frequency sound wave. Instead, it bends the wave by a process called diffraction which can produce extremely deformed frequency responses that vary greatly as the position of the sound source is moved relative to the microphone's location.

Since the microphone will be mounted on the wall, floor, etc., any mechanical vibration of the surface by machinery, traffic, etc., will represent a relatively powerful source of undesirable excitation. Such vibrations may be caused by noise sources, either within the room or on the other side of the barrier surface. Electro-Voice microphones mounted in the 370 are exceptionally immune to shock excitation due to the diaphragm plane being at a right angle to the normal movement of the surface and to the low shock sensitivity of their extremely low-mass diaphragms.

If the surface is mechanically vibrating, it will produce an airborne sound. The microphone, simply by being so close to the source of the offending sound, is affected to a far greater degree than a microphone mounted a significant distance from the vibrating surface.

WARRANTY (Limited)
Electro-Voice Professional, PL & BK Series Microphones are guaranteed against malfunction from any cause for a period of two years from date of original purchase. Also, these microphones are guaranteed without time limit against malfunction in the acoustic system due to defects in workmanship and material. Any active electronics incorporated in the microphone are guaranteed for three years from date of original purchase for parts and labor against such malfunction. If such malfunction occurs, microphone will be repaired or replaced (at our option) without charge for materials or labor if delivered prepaid to the proper Electro-Voice service facility. Unit will be returned prepaid. Warranty does not extend to finish, appearance items, cables, cable connectors, switches, or malfunction due to abuse or operation under other than specified conditions, nor does it extend to incidental or consequential damages. Some states do not allow the exclusion or limitation of incidental or consequential damages, so the above exclusion may not apply to you. Repair by other than Electro-Voice or its authorized warranty service agencies will void this guarantee. A list of authorized warranty service centers is available from Electro-Voice, Inc., 600 Cecil Street, Buchanan, MI 49107 (AC/616-695-6831); or Electro-Voice West, 8234 Doe Avenue, Visalia, CA 93291 (AC/209-651-7777). This warranty gives you specific legal rights, and you may also have other rights which vary from state to state.

Service and repair address for this product: Electro-Voice, Inc., 600 Cecil Street, Buchanan, Michigan 49107.

Specifications subject to change without notice.

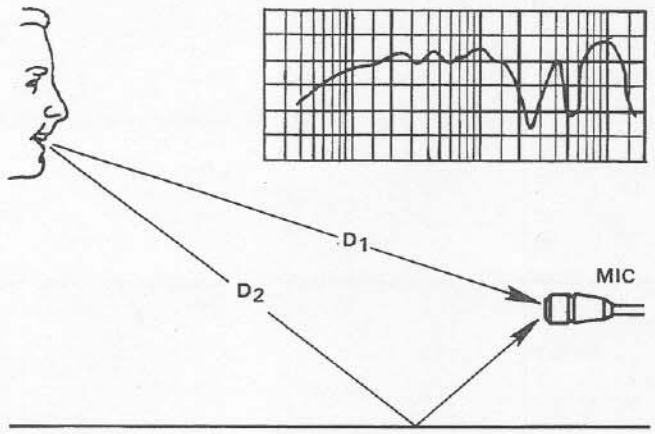

FIGURE 3A — Phase cancellation resulting from time difference between paths D_1 and D_2 occurs at an audible frequency

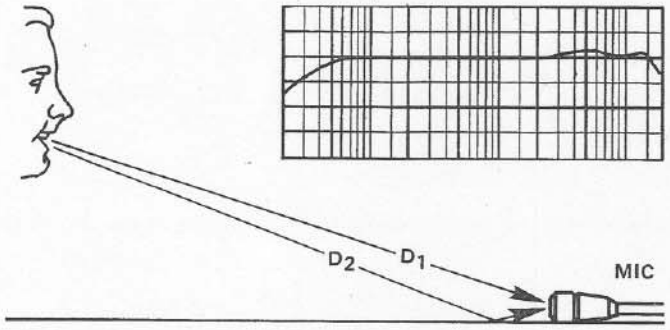

FIGURE 3B — Negligible time difference between paths D_1 and D_2 results in cancellation only at extremely high frequencies, close to or beyond the limits of audibility

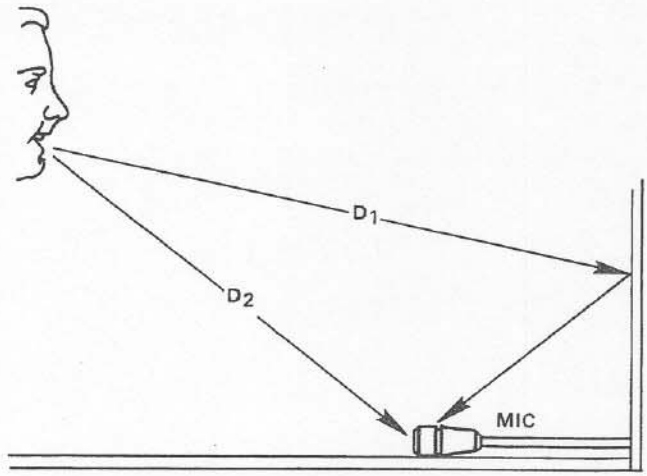

FIGURE 4 — Reflection caused by placement too close to secondary barrier