University Sound
A Mark IV Company

1802-PMA
Microphone Preamplifier-Mixer

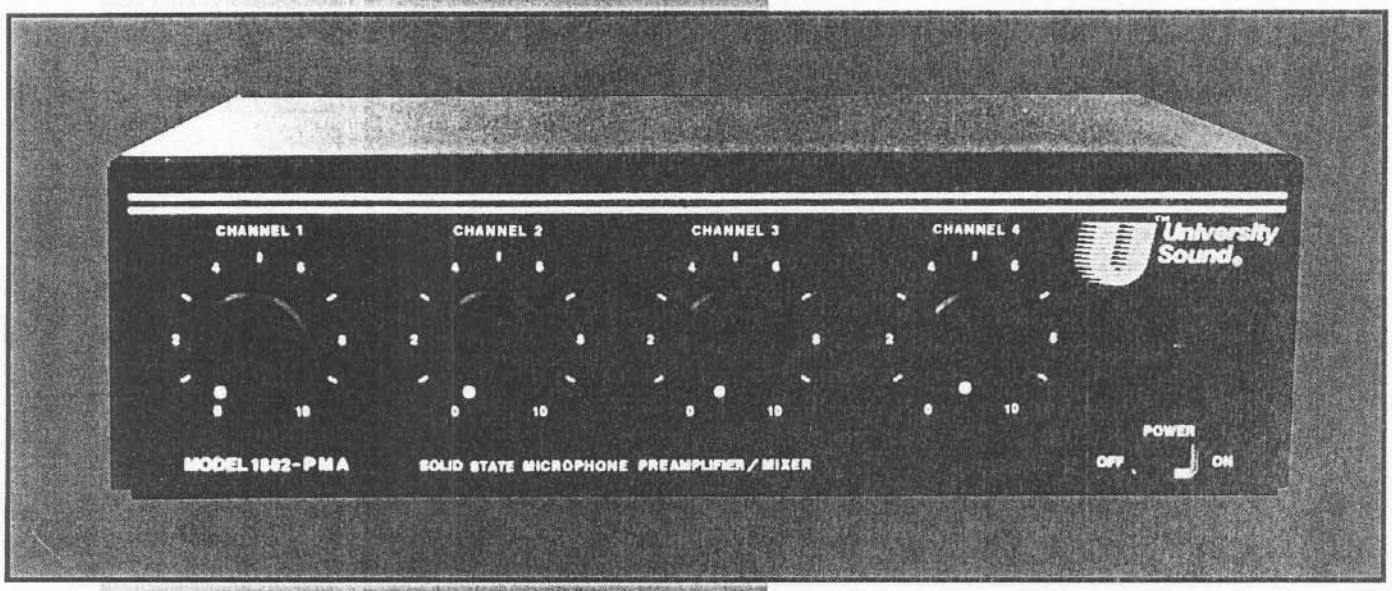

Product Data

- **Line level and microphone level outputs**
- **4 Hi-Z/Lo-z microphone inputs, each with its own level control**
- **Inputs 3 and 4 can also be used as Aux inputs**
- **Up to 3 units may be paralleled to accommodate up to 12 input sources**
- **UL listed**

Specifications:

Frequency Response:	25 Hz – 17.5 kHz, ± 2 dB
Inputs:	Two Lo-Z/Hi-Z mic Two Lo-Z/Hi-Z mic/Aux
Outputs:	10mV/150Ω mic 4V/47kΩ auxiliary
Dimensions:	9.5" W x 3.125" H x 7" D (24.1 cm x 7.9 cm x 17.8 cm)
Shipping Weight:	7 lbs. (3.2 kg)

Description

The University Sound Model 1802-PMA is a monaural solid-state low noise microphone pre-amplifier-mixer. The unit contains a circuit designed to eliminate the interaction between volume controls. The 1802-PMA provides a choice of three input combinations as follows; 1) 4 microphones; 2) 3 microphones and 1 auxiliary; 3) 2 microphones and 2 auxiliaries. Each microphone input has a rear panel selector switch directly above each 1/4" phone input jack to match either high or low impedance microphones. Two of the four channels will accept high level signals such as a tuner or CD player on separate RCA phone jacks. Two outputs are provided; 1) a high level output to match the auxiliary input of an amplifier, and 2) a low level output to match the microphone input of an amplifier. Two or three 1802-PMA outputs may be paralleled into an external amplifier input for a maximum of 12 inputs. An isolated signal ground permits rack mounting of the unit without forming "ground loops."

The unit is enclosed in a sturdy steel cabinet finished in black, and operates from a standard 120V AC, 50/60 Hz power source

Architect's and Engineer's Specifications

The microphone preamplifier/mixer shall have four Hi-Z/Lo-Z microphone inputs and two outputs. The microphone inputs shall have independent level controls and provide a circuit designed to eliminate the interaction between volume controls. The unit shall provide a rear panel selector switch to match either high or low impedance microphones. Separate RCA phono jacks shall be provided on two of the four channels and will accept high-level signals such as CD players. The two outputs shall consist of a high-level output to match the auxiliary input of an amplifier, and a low-level output to match the microphone input of an amplifier.

The unit shall measure 9.5" x 3.125" x 7.0" (24.1 cm x 79.4 cm x 17.8 cm), weigh 7 lbs. (3.2 kg) and shall operate from a 120V AC, 50/60 Hz line.

The microphone preamplifier/mixer shall be the University Sound Model 1802-PMA.

Rear Panel View/ Block Diagram

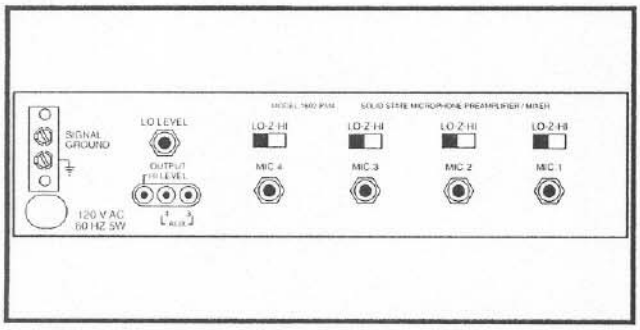

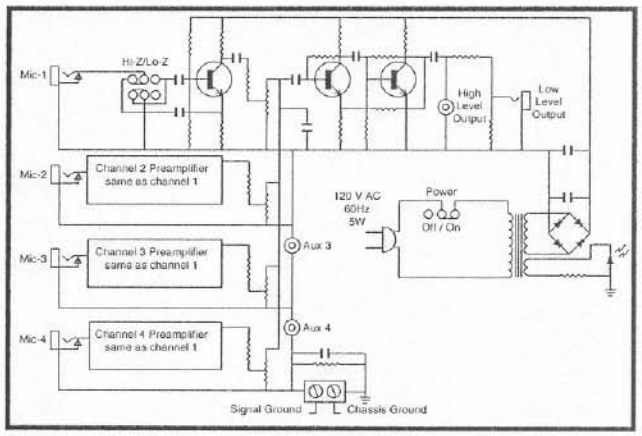

University Sound Inc.®

a MARK IV company
13278 Ralston Avenue
Sylmar, CA 91342-7607
FAX (818) 362-3463
PHONE (818) 362-9516

Mark IV Audio Canada
345 Herbert Street
Gananoque, Ontario K7G 2V1
FAX (613) 382-7466
PHONE (613) 382-2141

Part #207-0011-00

University Sound® Inc.

OPERATING INSTRUCTIONS

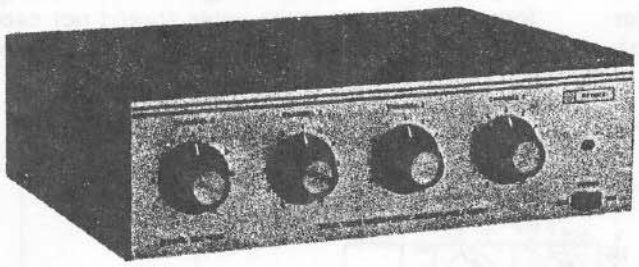

MODEL 1802-PMA

MICROPHONE PREAMPLIFIER-MIXER

WARNING - TO PREVENT FIRE OR SHOCK HAZARD, DO NOT EXPOSE THIS APPLIANCE TO RAIN OR MOISTURE.

DESCRIPTION

The Model 1802-PMA is a monaural all silicon solid state low noise microphone preamplifier-mixer with a circuit designed to eliminate interaction between volume controls. The preamplifier-mixer provides a choice of three input combinations as follows: (1) 4 microphones; (2) 3 microphones and 1 auxiliary; (3) 2 microphones and 2 auxiliaries. Each microphone input has a selector switch to match either high or low impedance microphones (unbalanced). Two of the four channels will accept high level signals such as a tuner or phono. Two outputs are provided: (1) a high level output to match the auxiliary (Phono/Line) input of an amplifier, and (2) a low level output to match the microphone input of an amplifier. Two or three 1802-PMA outputs may be paralleled into an external amplifier input for a maximum of 12 inputs. An isolated signal ground permits rack mounting of the unit without forming "ground loops".

UNPACKING

The unit is to be removed carefully from the carton and inspected for any possible damage in transit. If there is any evidence of any damage which might have occurred in shipment, immediately notify your supplier, or the transportation company which delivered it. Claims for damage sustained in transit must be made upon the carrier. Save all packing material for inspection by the claim agent who will furnish you with the proper forms and will also give you the necessary instructions for filing a claim.

INSTALLATION

The Model 1802-PMA has ample vents for normal ventilation; however, it should be placed so as to permit free air flow around the unit. If installed in a cabinet, ample ventilation must be allowed around the unit. DO NOT STORE OR OPERATE THE AMPLIFIER in areas where the ambient temperature exceeds 140°F.

The amplifier may be mounted in a 3½" vertical panel space in a rack, using a *University* RPK-4 rack mounting kit.

Plug the AC line cord in any outlet furnishing 105 to 120 volts, 60 cycles AC.

INPUT CONNECTIONS AND CONTROLS

All connections are made on the rear panel of the unit.

All patch cords and input leads must be shielded cables. Input connections to the AUX jacks are made by means of a standard phono plug. Input connection to the MICROPHONE jacks are made by means of a standard size shielded phone plug.

CAUTION

Due to the high gain involved, a plug with a metal cover, and *not* a plastic cover, must be used to prevent supersonic oscillation from occurring.

The MICROPHONE input jacks are for an unbalanced line only. The switch above the microphone input selects the proper input impedance. The HI-Z position will match either crystal or high impedance dynamic microphones; the Lo-Z position will match microphones in the 150 to 500 ohm range.

If it is necessary to use a balanced input, an outboard matching transformer such as *University* Model LMT-150 must be used. If the signal source is a telephone line or a 500 ohm input, the connection can be made to the amplifier by means of a *University* Telephone Matching Adaptor model TM-2.

When it is desirable to use a high level input such as a tape recorder or crystal phono instead of a microphone, Channel 3 or 4 must be used. The high level input con- shielded cable with suitable connectors on each end must be used. The high level output will match the auxiliary (Phono/Line) input of an amplifier; the low level output will match the microphone input of an amplifier. For optimum results, a Hi-Z microphone input should be used.

Up to three 1802-PMA preamplifier-mixer units may be operated in parallel to provide a total of twelve inputs. When paralleling the units, the high level outputs must be outputs, the connecting cable to the amplifier may be as long as 200 feet without affecting the high frequency response. When using a longer interconnecting cable, the total capacitance of the cable should not exceed 10,000 mmf, as otherwise high frequency attenuation will occur.

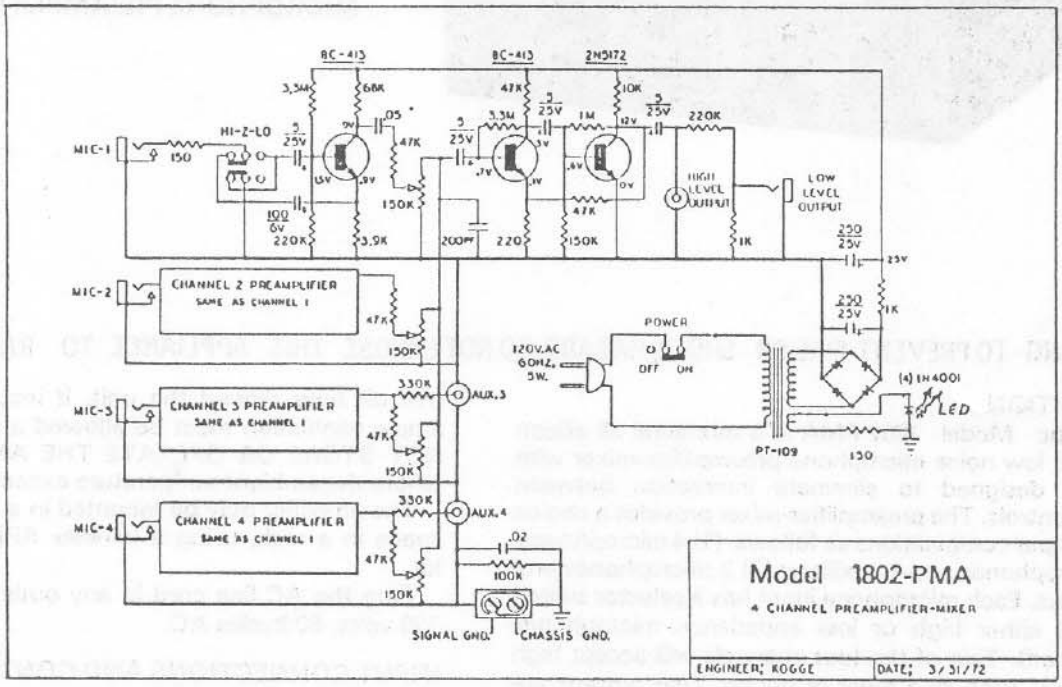

WARRANTY

THIS UNIT HAS BEEN VERY CAREFULLY INSPECTED AND IS WARRANTED TO BE FREE FROM DEFECTS IN MATERIAL AND WORKMANSHIP UNDER NORMAL USE AND SERVICE FOR A PERIOD OF ONE YEAR FROM DATE OF SALE TO THE ORIGINAL PURCHASER. THIS WARRANTY DOES NOT EXTEND TO ANY UNIT WHICH BEEN SUBJECT TO ABUSE, MISUSE, NEGLECT, ACCIDENT, IMPROPER INSTALLATION, OR ALTERATIONS. THE OBLIGATION OF ***University Sound*** UNDER THIS WARRANTY IS LIMITED TO THE REPAIR OF ANY DEFECT IN MATERIAL OR WORKMANSHIP AND/OR THE REPLACEMENT OF ANY DEFECTIVE PART, PROVIDED THE UNIT IS RETURNED TO ***University Sound*** TRANSPORTATION PREPAID.

IT IS RECOMMENDED THAT ANY UNIT ON WHICH SERVICE IS REQUIRED BE PROCESSED THROUGH YOU DISTRIBUTOR OR INSTALLATION COMPANY WHEREVER POSSIBLE.

THIS WARRANTY IS EXPRESSLY IN LIEU OF ALL OTHER WARRANTIES, EXPRESSED OR IMPLIED, AND OF ALL OTHER OBLIGATIONS OR LIABILITIES ON OUR PART. WE NEITHER ASSUME NOR AUTHORIZE ANY OTHER PERSON TO ASSUME FOR US ANY OTHER LIABILITY IN CONNECTION WITH THE PRODUCTS MANUFACTURED BY ***University Sound***.

MANUFACTURED IN THE USA BY

University Sound ***Inc.***

13278 Ralston Avenue
Sylmar, CA 91342-7607
Phone (818) 362-9516
FAX (818) 367-5292