MODEL 623 DYNAMIC MICROPHONE

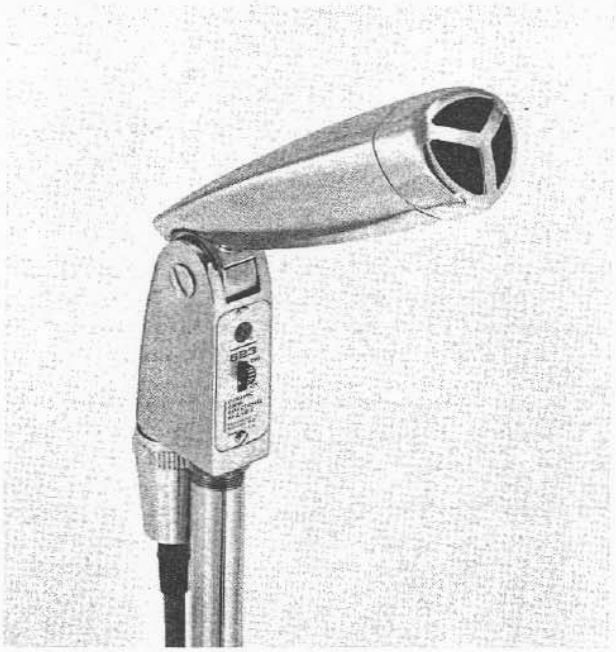

DESCRIPTION

The Electro-Voice Model 623 dynamic microphone is an excellent choice for high quality home recording, public address and communications use, being equally effective for both voice and music. It is mounted on a swivel which permits tilting the microphone in a 57° arc toward the sound source. The slim, small size of the microphone permits easy handling and inconspicuous use.

The model 623 is an omnidirectional microphone designed for use where reverberation or random noise is not a particular problem. It is equipped with a convenient "on-off" switch and may be mounted on a floor or desk stand or held in the hand.

The 623 features the exclusive Electro-Voice Acoustalloy® diaphragm. This nonmetallic diaphragm permits smooth response over a wide frequency range and resists the effects of high humidity, temperature extremes, corrosion by salt air, and severe mechanical shocks. With normal use, it is virtually indestructible.

WARRANTY

Each Electro-Voice microphone is guaranteed for the life of the microphone to be free of factory defects in materials and workmanship and will, at our option, be repaired or replaced at no charge if exhibiting malfunction from this cause. Microphones for warranty repair must be shipped prepaid to Electro-Voice, Inc., or its authorized service agency. They will be returned prepaid. This warranty does not cover finish or appearance.

For correct shipping address and instructions on return of Electro-Voice products for repair and locations of authorized service agencies, please write: Service Department, Electro-Voice, Inc., 600 Cecil Street, Buchanan, Michigan 49107 (Phone: 616/695-6831).

Electro-Voice also maintains complete facilities for non-warranty service.

SPECIFICATIONS

Element:	Dynamic
Frequency Response:	60 to 12,000 Hz
Polar Pattern:	Essentially omnidirectional, becoming directional with rise in frequency. (See Figure 1)
Impedance:	150 ohms and high impedance. Low impedance balanced to ground and phased. Normally high impedance when shipped.
Output Level,	
High Impedance:	−55 db (0 db = 1 volt/dyne/cm²)
150 ohm Impedance:	−58 db (0 db = 1 mw/10 dynes/cm²)
EIA Sensitivity Rating,	
High Impedance:	−151 db
150 ohm Impedance:	−153 db
Case:	Die-cast Zinc
Diaphragm:	Electro-Voice Acoustalloy®
Dimensions:	1-5/16" dia., 7-5/8" long (Including stud)
Finish:	Satin Chrome
Net Weight:	15 oz., including stud
Switch:	DPDT head shorted in "Off" position
Cable:	15' 2-conductor, shielded, synthetic rubber-jacketed broadcast type with QC-4M™ Quick-Change Connector at mike end
Connector in Mike:	Amphenol MC-4F
Stand Coupler:	5/8"−27 thread
Optional Accessories:	418,418S, 418G desk stand

ARCHITECTS' AND ENGINEERS' SPECIFICATIONS

The microphone shall be a dynamic, omnidirectional type with uniform frequency response from 60 to 12,000 Hz. The diaphragm shall be nonmetallic Acoustalloy and shall have a magnetic shield to prevent dust and iron particles from reaching the diaphragm. Available impedances shall be 150 ohm (Lo-Z) and high impedance (Hi-Z). It shall be possible to obtain the impedance desired by moving one connection in the cable connector. On low-impedance, line shall be balanced to ground and phased.

The output level for 150-ohm impedance shall be −58 db with 0 db equalling 1 mw/10 dyne/cm². Output level for high-impedance shall be −55 db with 0 db equalling 1 volt/dyne/cm². EIA sensitivity rating shall be −153 db for 150-ohm impedance and −151 db for high-impedance. The magnetic circuit shall be a nonwelded circuit and employ Alnico V and Armco magnetic iron.

The case shall be made of pressure-cast zinc. The microphone shall have a maximum diameter of 1-5/16" and a length of 7-5/8" , including stud. The net weight, less cable, shall be 15 ounces. Finish shall be satin chrome. A 15', two-conductor shielded, synthetic rubber jacketed, broadcast-type cable shall be provided. An Electro-Voice QC-4M Quick Change Connector shall be attached to the cable. Impedance changes shall be made in the QC-4M with no tools required. The microphone shall have a connector similar to the Amphenol Model MC-4F built into the microphone stud.

The microphone shall include a stand coupler with a 5/8"−27 thread on the stud and be equipped with an off/on switch. The stand coupler will allow tilting the microphone without strain on the connector or cable.

The Electro-Voice Model 623 microphone is specified.

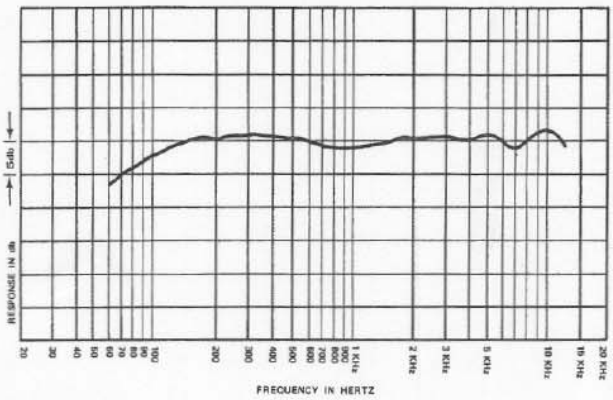

Figure 2 – Frequency Response

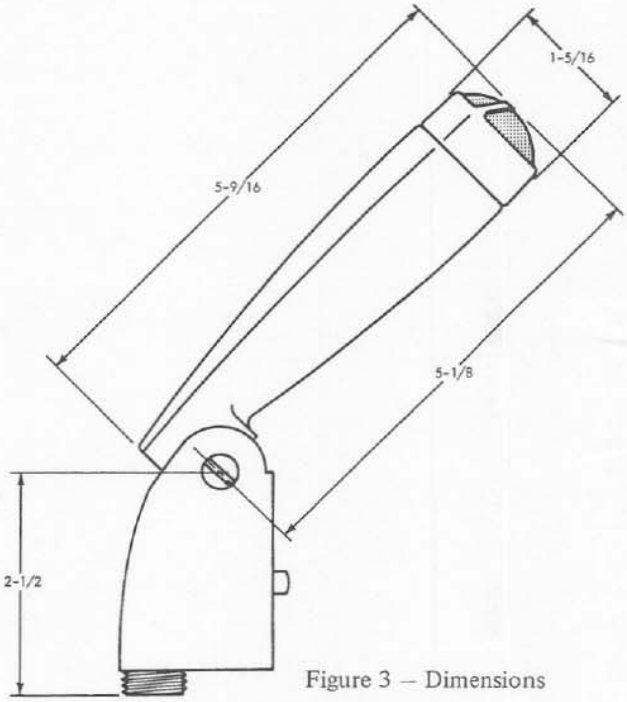

Figure 3 – Dimensions

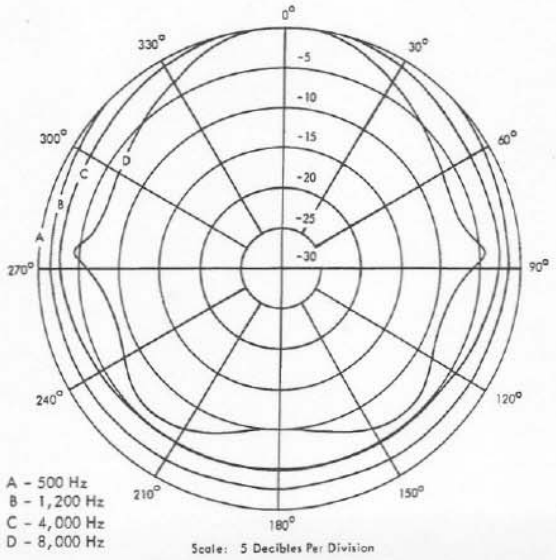

Figure 1 – Polar Pattern

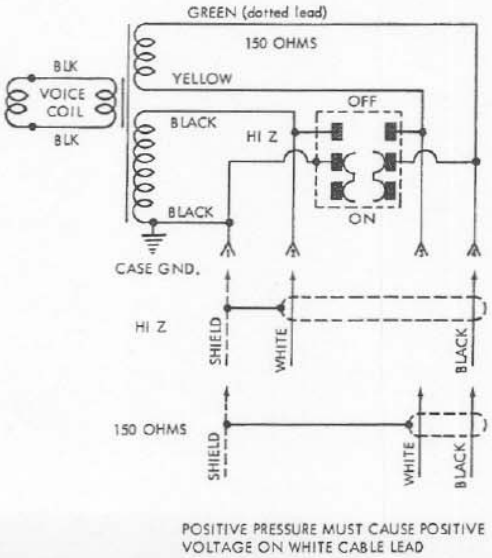

Figure 4 – Wiring Diagram

IMPEDANCE CHANGE PROCEDURE FOR E-V QUICK-CHANGE CONNECTOR

For added convenience and flexibility, an Electro-Voice innovation, the QC-4M Quick-Change Connector, is supplied with your Model 623. Change from high-impedance (Hi-Z) to low-impedance (Lo-Z) or the reverse, can now be made quickly and easily without tools.

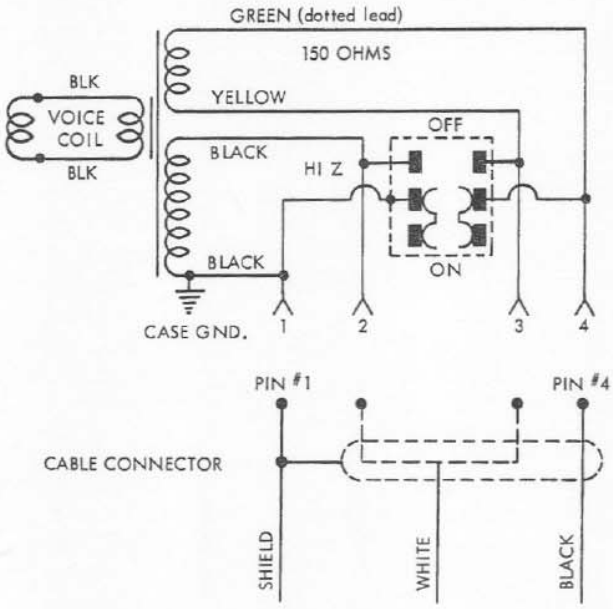

Figure A

Figure A shows the basic internal wiring diagram of E-V Dual Impedance microphones. Note that moving white cable conductor from Pin 2 to Pin 3 converts the microphone from Hi-Z to Lo-Z.

To change impedance, proceed as follows:

1. Remove cable from microphone by turning the connector shell to left (counter clockwise) until free and then gently pull it away from the microphone.
2. Gripping connector shell firmly in one hand and cable (near connector) in the other hand, firmly push cable into shell so that molded plastic insert slips from shell. (See Figure B)
3. Separate molded insert as shown in Figure C.
4. Note that cable shield and conductors are connected with "slip-in" pins. Shield pin is in Hole 1 of alignment frame, and pin on black conductor is in Hole 4. *These should not be changed.*
5. The pin connected to the white conductor of your cable should be inserted in Hole 2, if high-impedance is desired, or Hole 3, if low-impedance is desired. (See Figure D)
6. Snap molded insert halves into position. (See Figures B and C)
7. Firmly push connector shell back into position (reverse of Step 2). Pressure will be required since these parts are designed to provide close fit.
8. Align connector guide pin with key slot in the microphone and slip connector into position.

   Tighten connector shell by turning in clockwise direction.

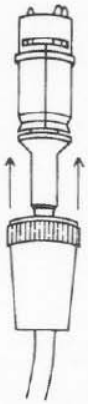

Fig. B

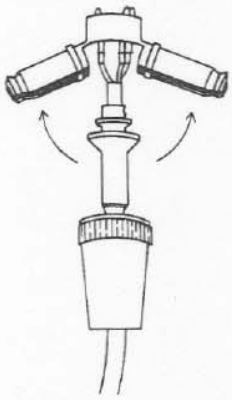

Fig. C

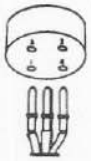

Fig. D

Your E-V Dual Impedance microphone is now ready for operation in the impedance you have selected.

Factory service and repair address for this product: Electro-Voice, Inc., Hwy 411 E., Sevierville, Tenn. 37862.

Part No. 534935—Litho in U.S.A.—240

a Gulton COMPANY ELECTRO-VOICE, Inc., 600 CECIL ST., BUCHANAN, MICH. 49107
MANUFACTURING PLANTS AT ■ BUCHANAN, MICH. ■ NEWPORT, TENN. ■ SEVIERVILLE, TENN. ■ GANANOQUE, ONT. ■ SEOUL, KOREA