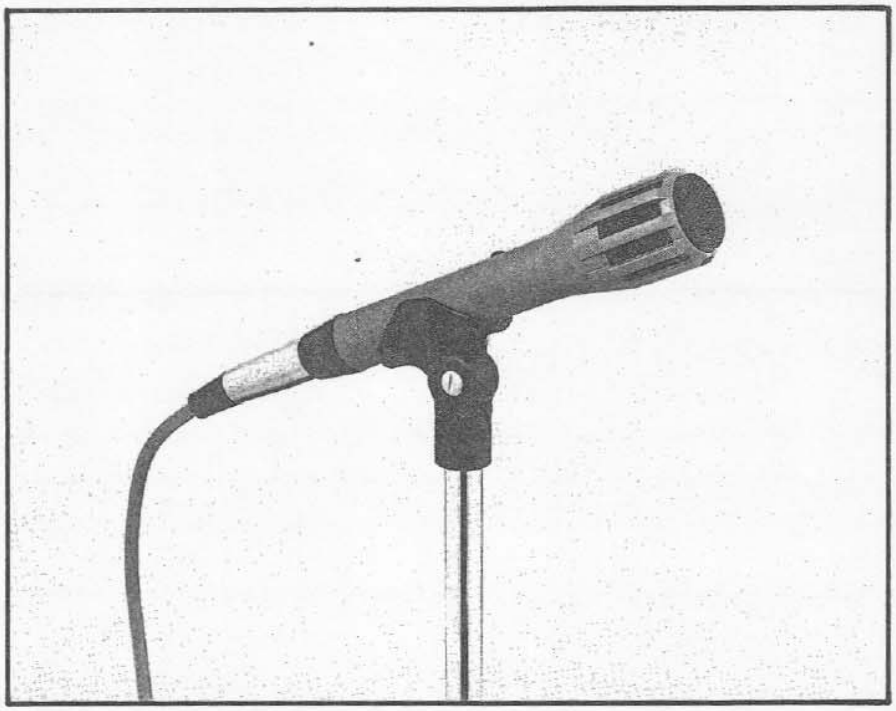

Electro-Voice®
a gulton company

Model 670A
Single-D Cardioid Microphone

SPECIFICATIONS

Element:
Dynamic
Frequency Response:
60—14,000 Hz
Polar Pattern:
Cardioid
Impedance:
150 ohms/Hi-Z, Selectable
Impedance Change:
Rear of connector insert
Output Level,
Low impedance:
–60 dB
(0 dB = 1 mW/10 dyne/cm^2)
High impedance:
–61 dB
(0 dB = 1 volt/dyne/cm^2)
EIA Sensitivity Rating,
150 ohms:
–154 dB
Hi-Z:
–156 dB
Diaphragm:
Laminated Mylar/Acoustalloy®
Switch:
On-off
Case:
Machined aluminum alloy
Finish:
Non-reflecting gray
Accessories Included:
Model 301 stand adapter
Optional Accessories:
Model 456 carrying case
Dimensions:
184 mm (7¼") long, without cable connector, 38 mm (1½") largest diameter, 25.4 (1") shank diameter
Weight:
170.1 g (6 ounces), without cable
Cable,
670A:
4.6 m (15 foot), two-conductor, shielded, vinyl jacketed, with Switchcraft A3F connector
670AP:
4.6 m (15 foot), two-conductor, shielded, vinyl jacketed, with Switchcraft A3F connector at the microphone end and ¼" phone plug at equipment end

DESCRIPTION AND APPLICATIONS

The Electro-Voice Model 670A is a Single-D cardioid microphone which emphasizes low frequencies when used "close up." Perfect for the exacting needs of high quality sound reinforcement, public address, and other applications, the 670A is ruggedly designed and attractively styled.

The 670A uses the broadcast standard three-pin "XLR" type connector. (See instructions for changing impedance for further information on the connector.)

A new head design and an exclusive Volumetric-Hologram designed diaphragm provide exceptionally wide, linear response at all angles of incidence for high gain-before-feedback in sound reinforcement applications, and virtual elimination of off-axis coloration. As part of this head assembly, a newly designed extremely effective shock absorber isolates the transducer assembly from mechanical noises. An internal Acoustifoam™ filter allows close talking without excessive "P-popping" and prevents dirt and magnetic particles from accumulating on the diaphragm.

The machined case is constructed of a high strength aluminum alloy and is designed for balanced and unobtrusive hand-held use.

IMPEDANCE CHANGE INSTRUCTIONS:

Impedance may be changed from Hi- to Lo-Z, or vice-versa, by changing one pin-connector at the rear of the microphone. Turn the setscrew in the connector-insert counter clockwise (it is a reverse-threaded screw and will not come out, but rather disappear into the insert). Pull the insert straight out from the end of the microphone exposing the wires connected to it. (See Fig. 2) For high impedance, the black wire should be connected to Pin 2 of the insert. For low impedance, the red wire should be connected to Pin 2. (A sleeve on the connector slides over the pin to insulate and assure a tight connection.)

Unbalanced Lo-Z and Hi-Z operation requires that the black wire at the equipment end of the cable be connected together with the ground shield to the sleeve (or ground connection) of the ¼" phone plug. The

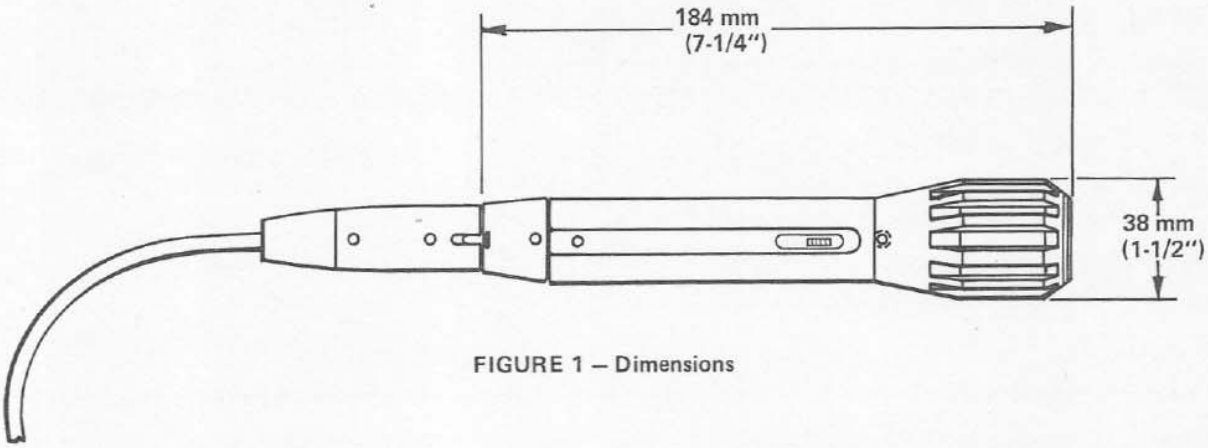

FIGURE 1 – Dimensions

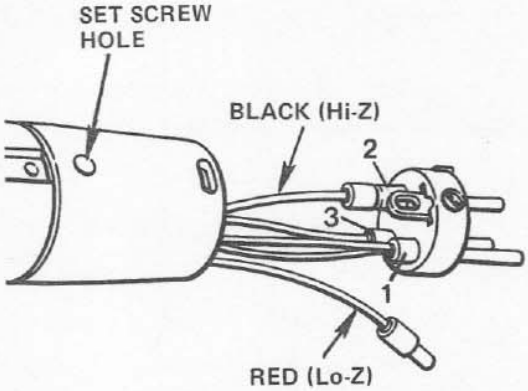

FIGURE 2 – Changing Impedance

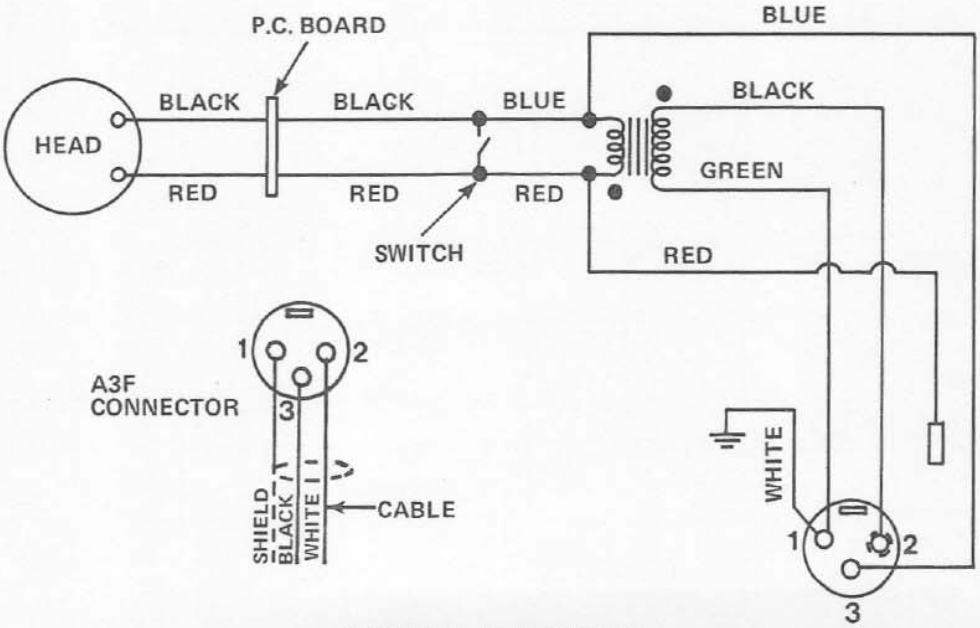

FIGURE 3 – Wiring Diagram

FIGURE 4
Frequency Response

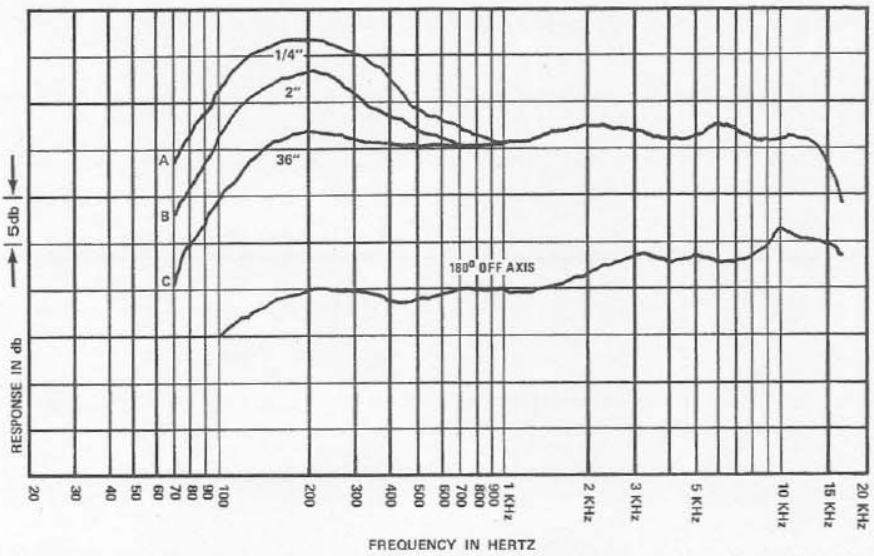

FIGURE 5
Polar Response

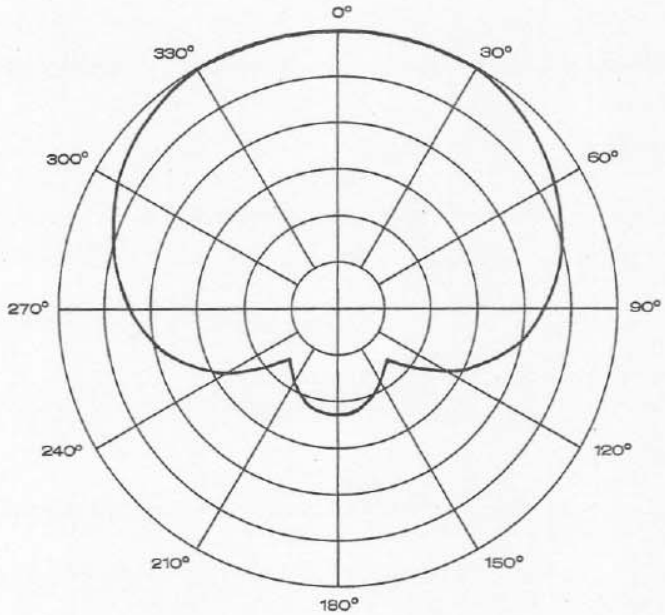

FIGURE 6
3-Pin Connector & ¼" Phone
Plug Wiring Connections

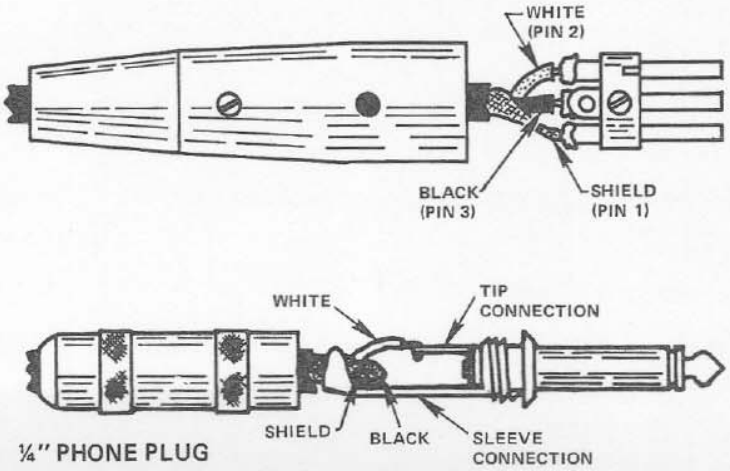

white wire is connected to the tip (or positive). (See Fig. 6) This is the way the plug is connected on the 670AP model. Impedance may be changed to unbalanced Lo-Z as described above. Figure 6 also shows the connection for a balanced Lo-Z operation using standard 3-pin connector such as the Switchcraft A3M.

USING THE VARIABLE LOW-FREQUENCY RESPONSE:

The 670A low-frequency response varies with the distance from the sound to the microphone as shown in the response curve (Figure 4). Maximum bass response is produced in close-up use with the microphone ¼-inch from the sound source (Figure 4A). Minimum bass response is experienced at distances greater than 24-inches (Figure 4C).

Useful special effects can be created by an imaginative application of the variable low-frequency response:

1. By working closer to the microphone than might otherwise be natural, the human voice will sound more robust, although intelligibility may be adversely affected.

2. Feedback in a public address system is sustained by reflection of sound into the microphone. For all microphones, as the artist moves closer, the level of his voice (at the microphone) increases and the microphone's signal to the amplifier is increased. For a constant volume of sound from the system, the amplifier gain setting must be proportionately reduced. This results in a reduction of the system's sensitivity to reflected sound, hence a reduction of the tendency to feedback.

The variable low-frequency response of the 670A provides a further feedback reducing advantage in close talking applications. At ¼-inch, low-frequency response is greatly enhanced, while response to distant sound (as from sound system loudspeakers) is unaffected. The result is a reduced tendency to feedback, over and above that provided by the cardioid directional characteristic alone.

In short, system sensitivity reduction because of close working, added to the advantage resulting from the bass boosting low-frequency characteristic of the 670A, makes this instrument an exceptionally effective tool for stage and nightclub use.

3. For musical pickup, the variable bass response can be utilized to achieve "clean" bass pickup at distances of 12-inches or more. By moving the 670A to a few inches from the instrument, bass will be increased.

Caution Notes: With the sound source (lips) closer than 2-inches, bass response is increased dramatically (as shown in Figure 4/A/B. If too much signal is generated at the microphone, over loading in the amplifier input circuits may occur, causing severe distortion.

ARCHITECTS' AND ENGINEERS' SPECIFICATIONS

The microphone shall be a cardioid dynamic type. Frequency response shall be 60-14,000 Hz, specially shaped above 1,000 Hz to maintain presence for vocal and musical pickups, and below 1,000 Hz shall vary inversely with distance. Response at the front of the microphone at 1,000 Hz shall be nominally 20 dB greater than response at the rear.

The microphone shall be a switchable impedance type (high impedance or 150 ohms balanced low). Output level for high impedance shall be –61 dB (0 dB equaling 1 volt/dyne/cm^2). Output level for low impedance shall be –60 dB (0 dB equaling 1 mW/10 dynes/cm^2). Microphone shall have a laminated Mylar/Acoustalloy diaphragm. An on-off switch shall be provided and so connected that the transducer is "shorted" when switch is in off position. A 4.6 m (15 foot), two-conductor, shielded, vinyl jacketed cable with Switchcraft A3F connector installed at the microphone end shall be provided. Low-impedance connection shall provide balanced line configuration.

The case shall be machined aluminum alloy. Dimensions shall be 184 mm (7¼ inches) long, 38 mm (1½ inches) diameter, with a 25.4 mm (1 inch) shank diameter. Net weight (less cable) shall be 170.1 g (6 ounces). Finish shall be non-reflecting gray. A Model 301 stand adapter shall be furnished. The Electro-Voice Model 670A is specified.

WARRANTY (Limited) –

Electro-Voice General Purpose Microphones are guaranteed without time limit against malfunction in the acoustic system due to defects in workmanship and materials. (Any active electronics incorporated in a microphone is guaranteed for three years from date of original purchase against such malfunction.) If such malfunction occurs, microphone will be repaired or replaced (at our option) without charge for materials or labor if delivered prepaid to the proper Electro-Voice service facility. Unit will be returned prepaid. Warranty does not cover finish, appearance items, cables, cable connectors, or switches and does not cover malfunction due to abuse or operation at other than specified conditions. Repair by other than Electro-Voice or its authorized service agencies will void this guarantee.

For repair information and service locations, please write: Service Department, Electro-Voice, Inc., 600 Cecil Street, Buchanan, Michigan 49107 (Phone 616/695-6831) or 7473 Avenue 304, Visalia, CA 93277 (209/625-1330,-1).

Electro-Voice also maintains complete facilities for non-warranty service of E-V products.

Specifications subject to change without notice.

Part Number 53324–720

a Gulton COMPANY **ELECTRO-VOICE, Inc., 600 CECIL ST., BUCHANAN, MICH. 49107**

MANUFACTURING PLANTS AT ■ BUCHANAN, MICH. ■ NEWPORT, TENN. ■ SEVIERVILLE, TENN. ■ GANANOQUE, ONT. ■ LITHO IN U.S.A.