POLY-DIRECTIONAL

Electro-Voice • CARDAK I

A versatile, poly-directional microphone with a constantly variable sound pick-up pattern. It is adjustable to reduce **any** combination of reflected sound.

In addition to broadcasting, recording, motion picture and public address applications, the Model 725 is favored for use by police and emergency services wherever uni-directivity is desired. It reduces noise, reverberation, and is ideal wherever higher fidelity is required to more accurately reproduce speech. Like the Model 730, the Electro-Voice Model 725 has superlative performance, thorough dependability and versatility of operation to match its modern functional appearance.

CARDAK I, Model 725, List Price **$55.00**

CARDAK I
MODEL 725

SPECIFICATIONS:

Output level rating:
Power: 54 db below 6 milliwatts for 10 dynes/cm² pressure.
Voltage (high impedance): 7 db above .001 volt/dyne/cm², open circuit.
Voltage developed by normal speech (10 dynes/cm²): .0224 volt.

Frequency response: 40-8000 c.p.s. Substantially flat.

Weight: 3 lbs.

Screw control in back of microphone enables user to vary the pick-up pattern of microphone from cardiod to bi-directional. Gives maximum aid in reducing feed-back and room reverberation.

Three contact, wiping connector, built-in, assures long life and quiet operation. On-an-off switch.

Head is tiltable for non-directional and directional pick-up.

Equipped with 20 feet of well shielded cable and connector. Low impedances are balanced to ground.

Satin chromium finish.

Sturdy construction — made of the finest high impact pressure-cast metal.

Case is equipped with specially designed wind filter to reduce wind noise for outdoor use.

Available in Hi-Z (direct to grid), 50, 200, 250 or 500 ohms.

Dual head microphone, with one dynamic element in combination with a diaphragm actuated velocity unit, makes possible the use of the variable pick-up pattern control.

Scientifically designed diaphragms are of the best grade heat-treated duralumin processed to prevent corrosion. This gives protection for use in salt air and excess humidity. Will stand 100 hour salt spray test, which is equivalent to 5 years use at tropical temperatures.

MECHANICAL DIMENSIONS

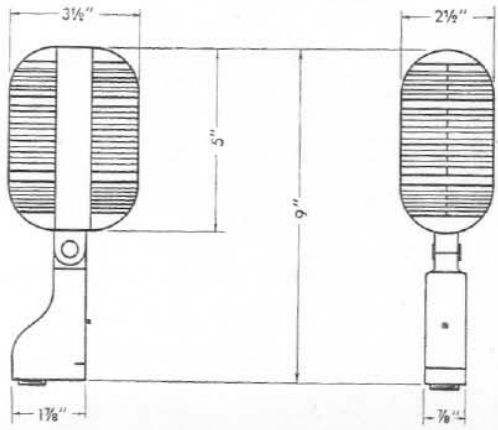

Technical Data for the ELECTRO-VOICE Model 725

CARDAK MICROPHONE

General. The CARDAK is a high fidelity dynamic type microphone designed for all types of sound pick-up. It is particularly valuable for use under adverse acoustic conditions as it may be easily adjusted to reject unwanted reflected sound thereby making possible a wider working range and relative immunity from "feed-back".

Fidelity. Frequency range is from 30-10,000 c.p.s. Lower and middle register is flat with a rise of 5 DB from 3,000 c.p.s. to upper cut-off. This curve has proved to be highly desirable for both music and speech reproduction.

Level. The output level is from –52 to –55 DB depending on the phase adjustment, described later. It is ample for all commercial amplifiers. Ratings are given for the high impedance (direct-to-grid) types, open line. 1 volt/bar.

Cable. High Impedance. The Cardak is equipped with 20' of extremely low capacity cable with phosphor bronze center strands to prevent breakage. Additional cable can be added and as much as 50 to 75 feet will not seriously impair the frequency response. It is recommended that extension cable has a maximum capacity of .0006 mfd. for 20' length. This can be easily measured on a capacity bridge. Extra cable should be joined through shielded connectors.

Low Impedance. 20' double conductor cable is furnished with all 50, 200 or 500 ohm microphones. The two leads are balanced to ground to provide stability for long lines. Low impedance microphone lines can be run several thousand feet with negligible loss. Termination is made through a suitable coupling transformer having a high permeability core (E-V model 502 or equivalent).

On-Off Switch. This is mounted as an integral part of the lower mounting stud. It is easily removed for cleaning if it should become oxidized through long periods of inoperation.

Cable Connector. A three contact wiping connector employing Amphenol inserts is standard equipment. It is polarized to prevent damage by forcing into wrong position. Cables may be easily changed. On the high impedance types, the cable shield is soldered directly to the spring and the grid lead connected to No. 3 prong. The low impedance types connect similarly except the line leads connect to No. 2 and No. 3.

Finish. The CARDAK is finished in Butler Chromium. Occasional wiping with a soft cloth is all that is necessary to preserve its rich lustre.

Tilting Stud. This makes it possible to tilt the head toward the sound source for maximum pick-up, or for placing it in horizontal position for non-directional operation. Under normal use, the friction adjustment will not need attention over a period of years but in the case of excessive adjustment, it may be easily tightened.

Phasing for Correct Directivity

General. The Cardak has an infinitely variable pick-up pattern that can be adjusted to discriminate against unwanted direct or reflected sound by merely turning the control located at the lower part of the back cover. Simply stated, it is possible to TUNE the CARDAK to the best operating condition of the particular location in which it is used.

The Function of the Control.

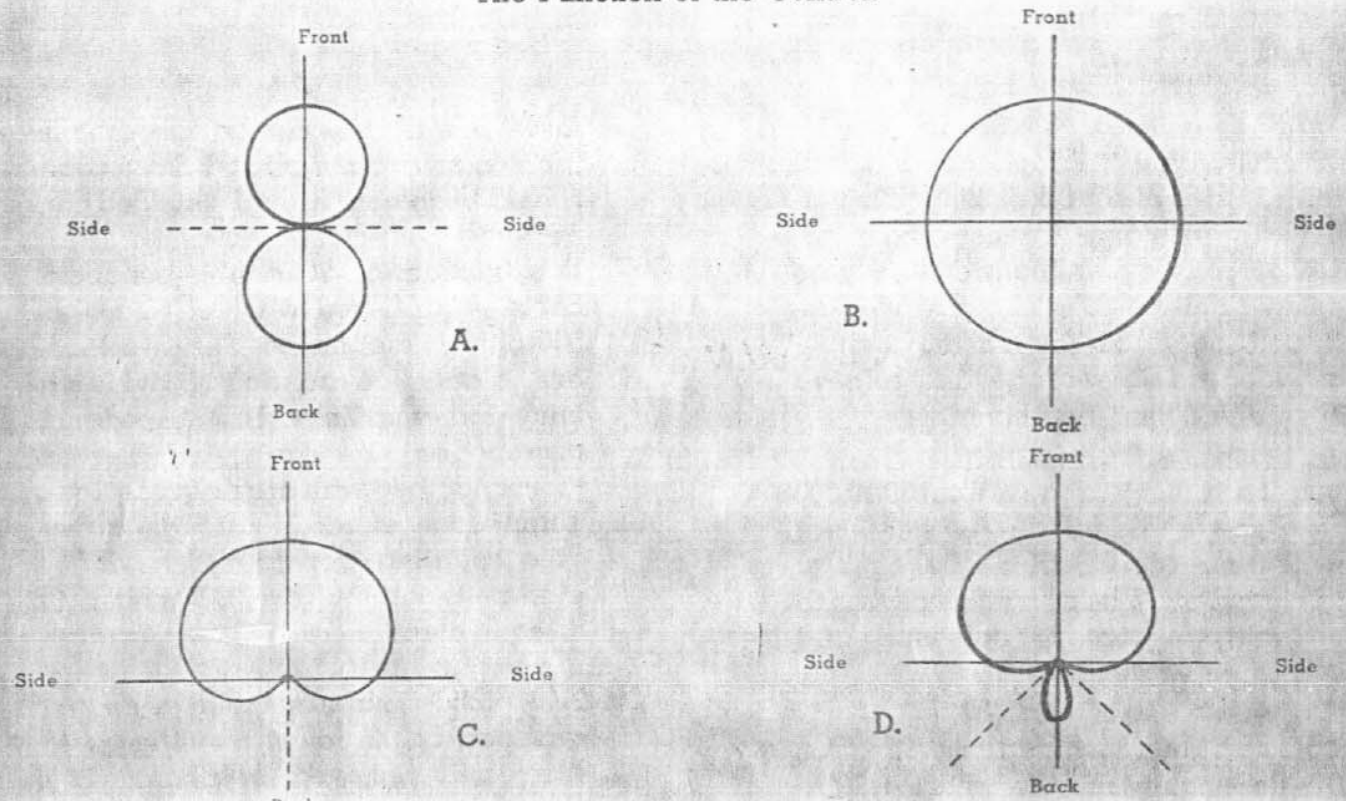

DOTTED LINES INDICATE ZERO PICKUP

A. Bi-directional pattern obtained with control at extreme right position. Cancels sound from right angles to microphone. Useful for applications when speakers are located at the side of the microphone.

B. Non-directional. Microphone in phase (cancelling from back). For use in group pick-up, when acoustic conditions will allow. Tilt microphone head to horizontal position.

C. Cardioid, uni-directional. Proper adjustment when the unwanted sound is directly from the rear. It is adjusted to this condition by speaking into it from the rear and turning the control to the position where least response is obtained. (From the rear)

D. One of the infinite adjustments for elimination of sound striking the back of the microphone from an angle. The correct setting is obtained by turning the control to the point where the lowest feed-back is obtained in the particular place that it is being used.

Electro-Voice Manufacturing Company, Inc.
1239 South Bend Avenue South Bend, Indiana