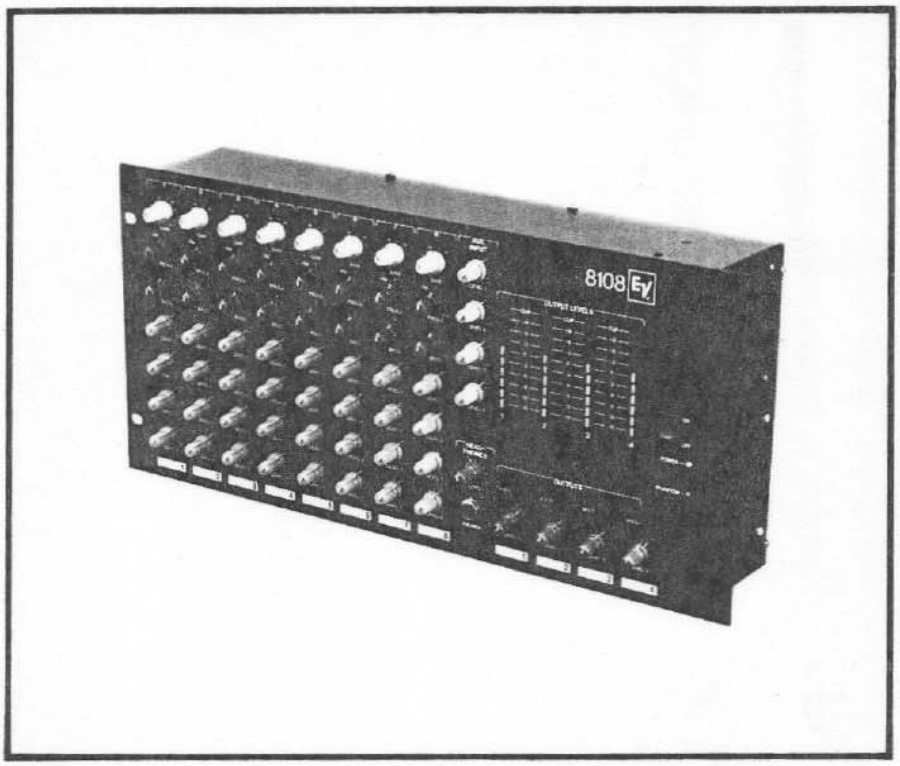

Electro-Voice®
a gulton company

Model 8108
8-INPUT, 4-OUTPUT
Rack-Mount Mixer

GENERAL SPECIFICATIONS

Frequency Response,
Mic Input at Maximum Gain or Line Input at Unity Gain to Any Output:
20-20,000 Hz ±2 dB
50-20,000 Hz ±1 dB

Total Harmonic Distortion, Transformer Isolated Outputs, 600-Ohm Load,
50-20,000 Hz at +4 dBu Output:[1]
Less than 0.1%
50-20,000 Hz at +18 dBu Output:
Less than 0.1%

Equivalent Input Noise (150-ohm source):[2]
−128 dBu typical

Output Noise at Transformer Isolated Outputs, All Faders Down Except as Indicated,
Master at Nominal ("0"):[3]
−82 dBu maximum
One Input and Master at Nominal (67-dB gain):[3]
−61 dBu typical

Maximum Voltage Gain,
Mic Input to Transformer Isolated Outputs:
90 dB typical

Fader Reserve Gain:
12 dB

Adjacent Channel Crosstalk at 1,000 Hz:
−65 dB

Power Requirements:
95-130 volts, 60 Hz[4],
25 watts maximum

Colors, Materials, and Finishes,
Chassis:
Black painted metal with light grey graphics
Knobs:
Grey (3 shades) and red
Switches:
Black

Dimensions,
Height:
22.2 cm (8.75 in.)
Depth:
12.0 cm (4.7 in.)
Width:
48.3 cm (19.0 in.)

Net Weight:
7.5 kg (16.5 lb)

Shipping Weight:
8.9 kg (19.5 lb)

1. 0 dBu is 0.775 volts RMS sine wave. Since the load is specified at 600 ohms, dBu figures may also be read as dBm, a power measure where 0 dBm is 1 mW into 600 ohms.
2. 20-20,000-Hz bandwidth, input gain at "60."
3. Input gain at "60," 20-20,000-Hz bandwidth

DESCRIPTION

The Electro-Voice 8108 mixer is a high-performance, high-value rack-mount mixer designed for fixed professional sound installations. Features and performance make the 8108 ideally suited for those situations where maximum routing flexibility is needed in a compact rack-mount design. The 8-input, 4-output matrix provides independent outputs for use in sound reinforcement, recording, broadcast, or zoned systems; also the 8108 can be used to provide a subgroup mix matrix for a larger console. All eight microphone inputs and four outputs are balanced and transformer isolated. Transformer isolation reduces the probability of hum and noise by preventing ground loops.

GENERAL FEATURES

- Equal headroom in all stages for optimum noise performance.
- Gain calibrated level controls for visual check of mixer stage gain.
- Optimum circuit design to reduce harmonic and intermodulation distortion to inaudible levels.
- Transient performance not slew-rate or power-bandwidth limited under any conditions, 30-20,000 Hz.
- Space-saving, compact design.
- Four, 10-segment, LED bar graph Peak Program Meters are factory calibrated for = +0 dBu at transformer isolated utputs. Meter sensitivity is user-adjustable er a 20 dB range for other calibrations.

For Input and Output Sp

Post-It™ brand fax transmittal memo 7671 | # of pages ▸

To	From
Co.	Co.
Dept.	Phone #
Fax #	Fax #

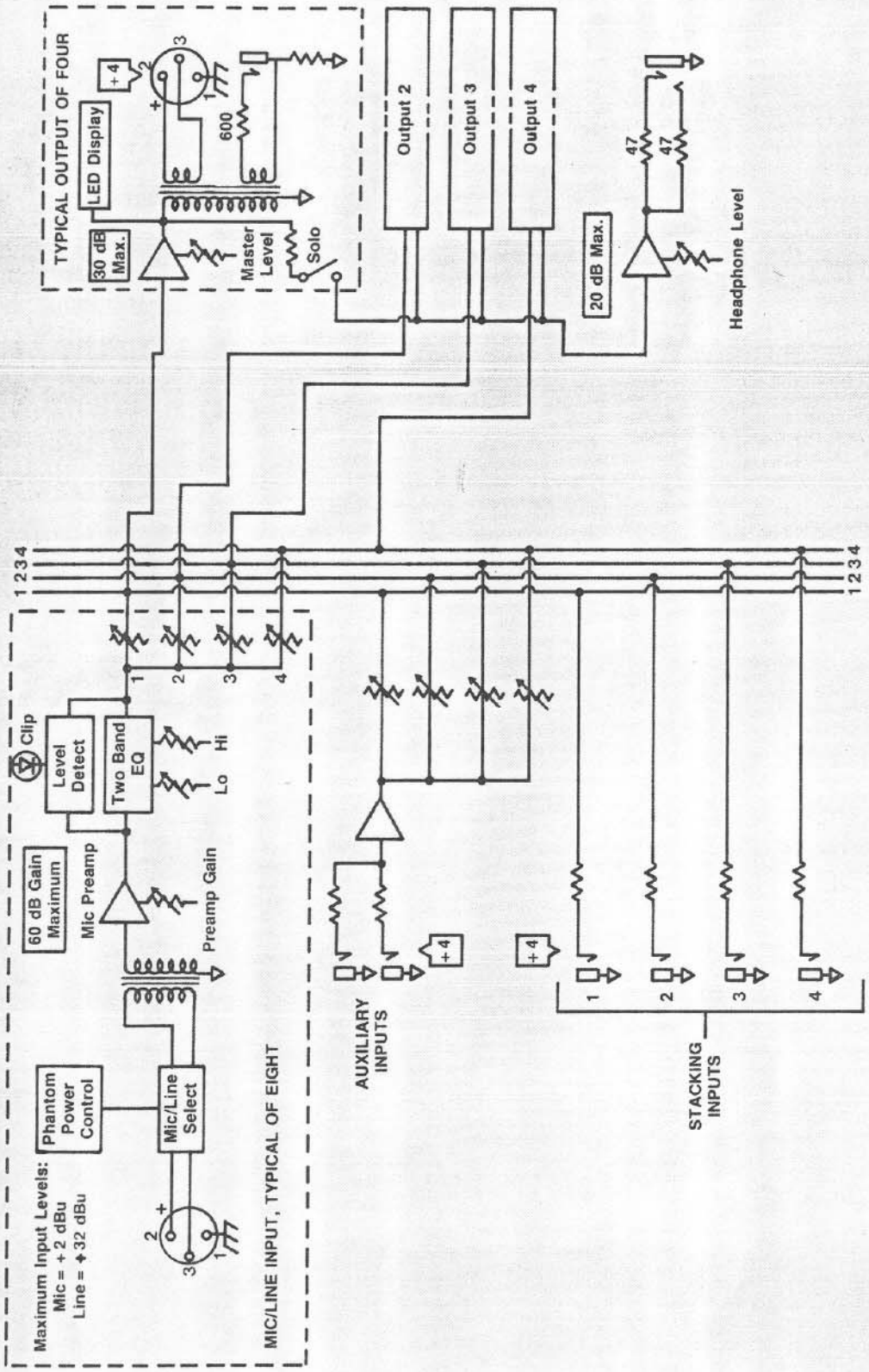

Block Diagram

INPUT SECTION FEATURES

- A single 3-pin XLR-type connector accepts microphone and line level inputs via a mic/line switch. These inputs are transformer coupled.
- 48-volt phantom power for all microphone inputs.
- Circuitry to accommodate input levels from speech with distant microphones to close miking of high level sources.
- Continuously variable input gain controls for quick and accurate setting.
- Preamplifiers with −128 dBu equivalent input noise, high gain and very low distortion.
- Two band, shelving EQ with corner frequencies at 100 Hz and 10,000 Hz.
- Four independent sends with 12-dB reserve gain.
- LED clip indicator which signals the onset of pre-amp or EQ section overload.

OUTPUT SECTION FEATURES

- Four independently adjustable mono outputs.
- Stacking input jacks for all buses, to link with other mixers.
- Powerful headphone amp with level control.
- Solo feature on each output for headphone monitoring.
- Auxiliary input with independent level controls for each send.

CONNECTIONS

- All microphone inputs have female 3-pin XLR-type connectors. Pin 2 is positive; pin 3 is negative.
- The transformer-isolated outputs have male 3-pin XLR-type connectors. Pin 2 is positive; pin 3 is negative.
- The headphone connection is a three-conductor ¼-inch phone jack.
- All other connections on the mixer are two-conductor ¼-inch phone jacks.
- All stacking and auxiliary jacks are line-level inputs.

ARCHITECTS' AND ENGINEERS' SPECIFICATIONS

The mixer shall have 8 transformer-isolated, balanced input channels with rear-mounted, female 3-pin XLR-type connectors, switch selectable for microphone or line-level sources. Each input shall have the following front panel controls: preamp gain control with continuous action, two-band equalizer with 12 dB of boost or cut and corner frequencies at 100 Hz and 10,000 Hz (shelving curve), clip indicator with two-point sensing, and 4 rotary level controls with 12-dB reserve gain that apportion the input signal to the four independent mix buses. Each main input shall have 48 Vdc remote microphone power applied to pins 2 and 3, with a rear-mounted master phantom power switch.

There shall be two ¼-inch phone jack auxiliary inputs with the summed signal from these jacks provided to the 4 mixing buses, with independent level control to each bus. Stacking inputs with ¼-inch jacks shall be provided for the four mix buses.

There shall be four independent monural outputs. Each output shall have a level control with 12-dB reserve gain, a ten segment LED Peak Program Meter whose sensitivity is user adjustable over a 20-dB range, and a solo switch. Output connections shall be provided as follows: four male 3-pin XLR-type connectors for tranformer-isolated outputs (27-ohm source impedance); four two-conductor ¼-inch jacks for transformer-isolated outputs (600-ohm source impedance).

A headphone level control and a three-conductor ¼-inch jack shall be provided on the front panel for headphones. The headphones shall monitor any combination of the four outputs by activiation of the solo switch located at each output.

An open area (1" height max.) shall be provided at the lower edge of the mixer for custom labeling.

A main power switch with indicator and a phantom power indicator shall be located on the front panel. The mixer shall operate on 120 Vac (or 100, 220, or 240 Vac) and consume less than 25 watts. The mixer shall be operable over the temperature range of 0° C (32° F) to 50° C (122° F).

The mixer shall meet or exceed the following performance specifications: frequency response from microphone or line input to any output, ±2 dB 20 Hz to 20 kHz, ±1 dB 50 Hz to 20 kHz; any other input to any output, ±1 dB 20 Hz to 20 kHz; total harmonic distortion of less than 0.1% 50 Hz to 20 kHz at +4 dBu output level, less than 0.1% 50 Hz to 20 kHz at +18 dBu output level, rising to less than .5% at 20 Hz; equivalent input noise of −128 dBu 20 Hz to 20 kHz with 150-ohm source and maximum preamp gain; maximum voltage gain of 90 dB (microphone input to any output); and adjacent channel crosstalk of −65 dB at 1 kHz. The chassis shall be black painted sheet metal, and occupy five rack spaces in a standard 19" rack (height: 8¾", depth: 4 11/16", width: 19"). The weight shall be 16.5 pounds. The mixer shall be Electro-Voice model 8108.

WARRANTY (Limited)

Electro-Voice Professional Sound Reinforcement Electronic Components are guaranteed for two years from date of original purchase against malfunction due to defects in workmanship and materials. If such malfunction occurs, unit will be repaired or replaced (at our option) without charge for materials or labor if delivered prepaid to the proper Electro-Voice service facility. Unit will be returned prepaid. Warranty does not extend to finish, appearance items or malfunction due to abuse or operation under other than specified conditions, nor does it extend to incidental or consequential damages. Some states do not allow the exclusion or limitations of incidental or consequential damages, so the above exclusion may not apply to you. Repair by other than Electro-Voice or its authorized service agencies will void this guarantee. A list of authorized service centers is available from Electro-Voice, Inc., 600 Cecil Street, Buchanan, MI 49107 (AC/616-695-6831); Electro-Voice, Inc., 3810 148th Avenue N.E., Redmond, WA 98052 (AC/206-881-9555); and/or Electro-Voice West, 8234 Doe Avenue, P.O. Box 3297, Visalia, CA 93291 (AC/209-651-7777). This warranty gives you specific legal rights, and you may also have other rights which vary from state to state.

Service and repair address for this product: Electro-Voice, Inc., 3810 148th Avenue, N.E. Redmond, Washington 98052 (Phone: 206/881-9555).

Specifications subject to change without notice.

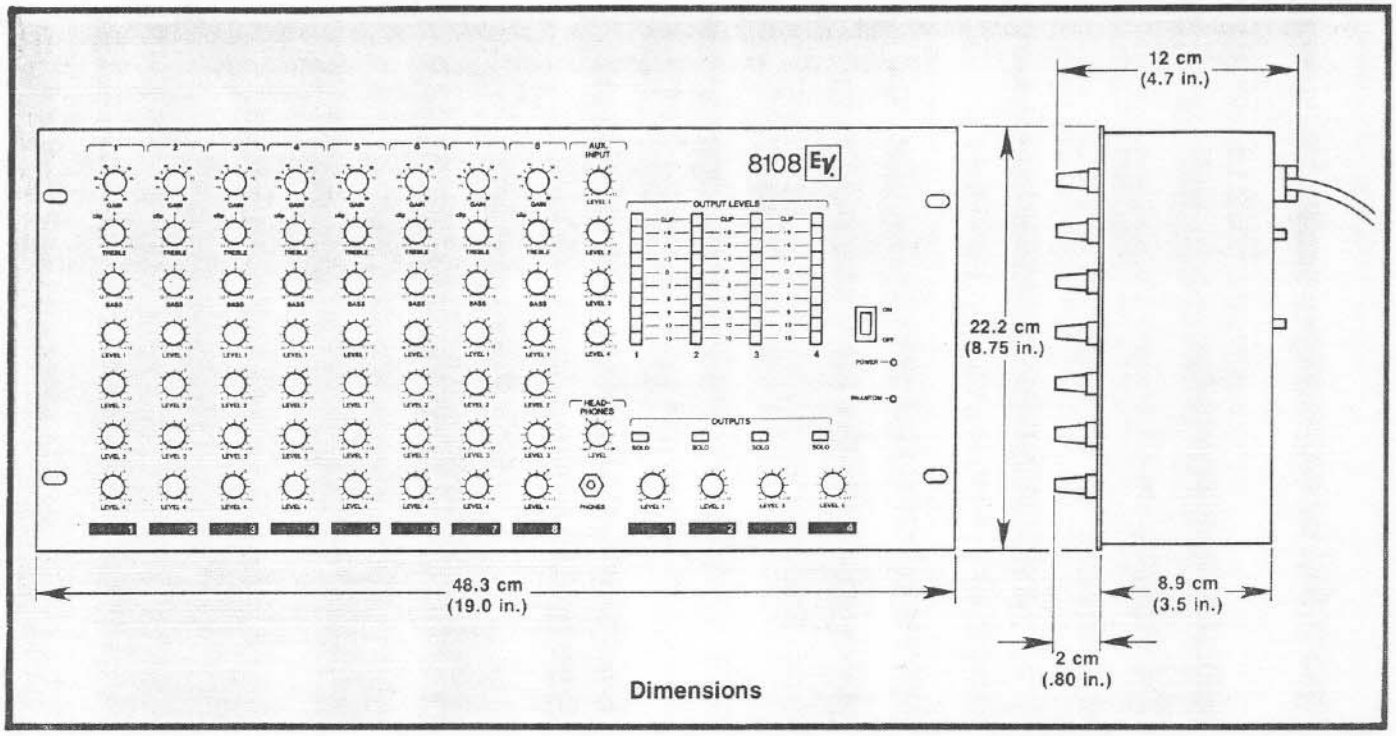

Dimensions

INPUT SPECIFICATIONS
Input Impedance,
Mic:
1,500 ohms mid band
⩾800 ohms, 20 Hz-20 kHz
Line:
12,000 ohms
Stacking:
10,000 ohms
Aux:
27,000 ohms
Nominal Level,
Mic,
Gain Control at "60":
−60 dBu
Gain Control at "20":
−20 dBu
Line,
Gain Control Maximum:
−30 dBu
Gain Control Minimum:
+10 dBu
Stacking:
+4 dBu

INPUT SPECIFICATIONS (continued)
Maximum Level,
Mic,
Gain Control at "60":
−40 dBu
Gain Control at "20":
0 dBu
Line,
Gain Control Maximum:
−10 dBu
Gain Control Minium:
+30 dBu
Stacking:
+18 dBu

OUTPUT SPECIFICATIONS
Output Impedance,
Balanced Transformer Isolated Mains:
27 ohms
Unbalanced Transformer Isolated
600 Ω Out:
600 ohms
Headphone:
47 ohms left channel
47 ohms right channel
Load Impedance,
Unbalanced Transformer Coupled
600 Ω Out:
⩾10,000 ohms

OUTPUT SPECIFICATIONS (continued)
Transformer Isolated Mains:
⩾600 ohms
Headphone:
⩾8 ohms
Nominal Output,
Unbalanced Transformer Coupled
600 Ω Out (10K load):
+4 dBu
Balanced Transformer Isolated Mains
(600 Ω load):
+4 dBu
Headphone,
8-ohm Load:
−10 dBu
600-ohm Load:
+4 dBu
Maximum Output,
Unbalanced Transformer Coupled
600 Ω Out (10K load):
+18 dBu
Balanced Transformer Isolated Mains
(600 Ω load):
+18 dBu
Headphone,
8-ohm Load:
0 dBu
600-ohm Load:
+18 dBu

ELECTRO-VOICE, INC., 600 Cecil Street, Buchanan, Michigan 49107
MANUFACTURING PLANTS AT ■ BUCHANAN, MI ■ NEWPORT, TN ■ SEVIERVILLE, TN ■ REDMOND, WA ■ GANANOQUE, ONT.
© Gulton Industries, Inc. 1985 ■ Litho In U.S.A.
Part Number 700116—520
a gulton company