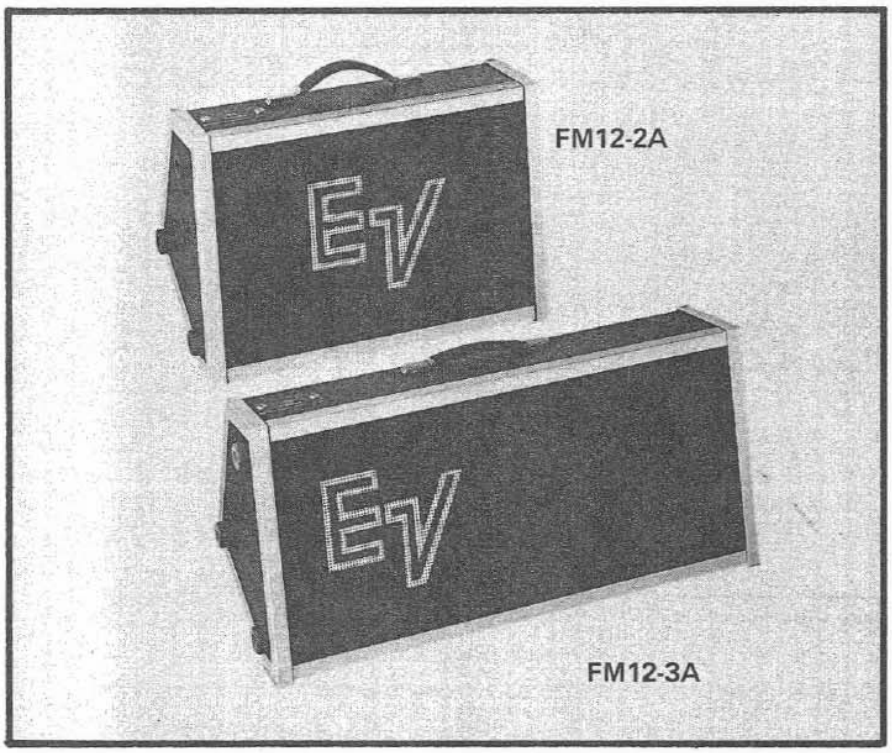

Electro-Voice®
a gulton company

Model FM12-2A/FM12-3A Floor Monitor Speaker Systems

SPECIFICATIONS

Usable Frequency Response,
FM12-2A:
85 Hz to 16 kHz
FM12-3A:
80 Hz to 16 kHz

Sound Pressure Level,
FM12-2A:
1 meter at 100 Watts input*
117 dB
1 meter at 1 Watt Input*
97 dB
FM12-3A:
1 meter at 100 Watts Input*
117 dB
1 meter at 1 Watt Input*
97 dB

Long Term Average Power Handling Capacity:*
(24 hours of clipped, shaped random noise) 100 Watts

Nominal Impedance:
8 Ohms

Minimum Impedance,
FM12-2A:
7.5 ohms
FM12-3A:
5.5 ohms

Crossover Frequencies,
FM12-2A:
5000 Hz
FM12-3A:
1000 Hz & 5000 Hz

Horizontal Beamwidth,
FM12-2A:
2 kHz – 70°
4 kHz – 45°

Horizontal Beamwidth,
FM12-3A:
2 kHz – 130°
4 kHz – 90°

Vertical Beamwidth,
FM12-2A:
2 kHz – 75°
4 kHz – 53°
FM12-3A:
2 kHz – 130°
4 kHz – 105°

Connections:
Parallel 1/4" phone jacks (allows paralleling of multiple speakers.)

Finish:
Black vinyl with aluminum trim

Dimensions,
FM12-2A:
38.1 cm (15 in.) high
33.7 cm (13.25 in.) deep
55.6 cm (21.88 in.) long
FM12-3A:
38.1 cm (15 in.) high
33.7 cm (13.25 in.) deep
81.0 cm (31.88 in.) long

Weight,
FM12-2A:
19.4 kg (43 lbs)
FM12-3A:
23.6 kg (52 lbs)

Optional Accessories:
Model 480A stand

*See POWER HANDLING TEST for input spectrum.

DESCRIPTION

The Electro-Voice Model FM12-2A, two-way floor monitor, and the Electro-Voice Model FM12-3A three-way floor monitor are small accurate monitor speaker systems that can be oriented in four different configurations: (1) as a floor monitor with speaker axis inclined 30 degrees to the floor. (2) as a floor monitor with speaker axis inclined 60 degrees to the floor. (3) as a side monitor (standing upright). (4) elevated on a stand. Both systems also incorporate new hi-frequency auto limiting as an electronic tweeter protection circuit.

The FM12-2A is designed primarily as a vocal monitor with frequency response tailored to the most popular vocal microphones. The FM12-2A is capable of high SPL with 117 dB being generated at 1 meter with full power.

The FM12-3A, three-way vocal monitor, incorporates the new Thiele-vented midrange speaker. It is said to combine the brilliance of a horn with the warmness of a cone speaker.

Construction of the FM12-3A cabinet consists of black vinyl covering 3/4" plywood with protective extruded aluminum trim. The FM12-2A construction is black vinyl covering

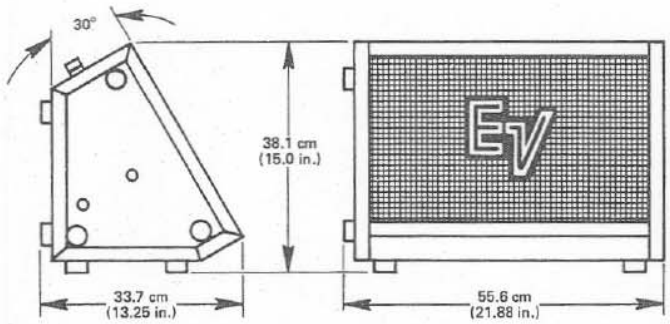

FM12-2A

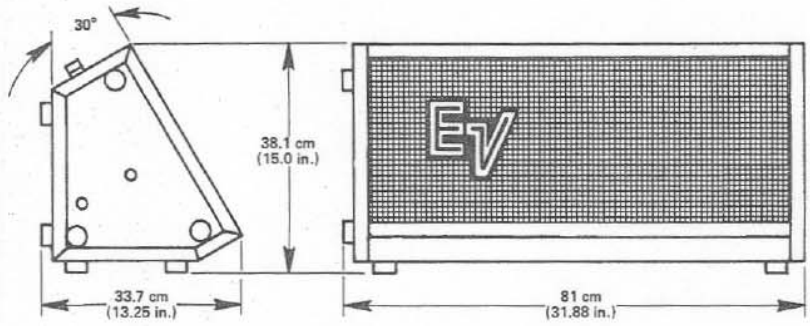

FM12-3A

FIGURE 1 – Dimensions

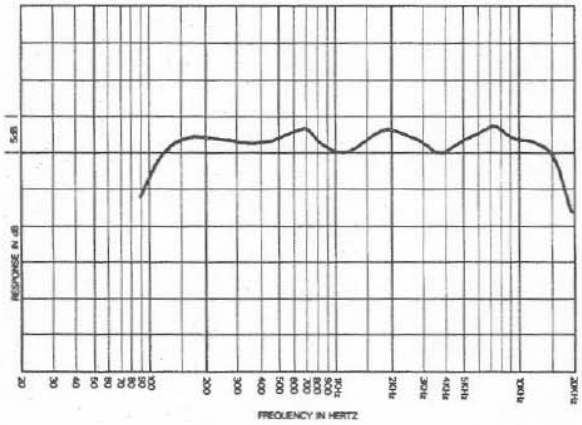

FIGURE 2 –
FM12-2A Frequency Response
(Swept 1/3-Octave Band Pink Noise)

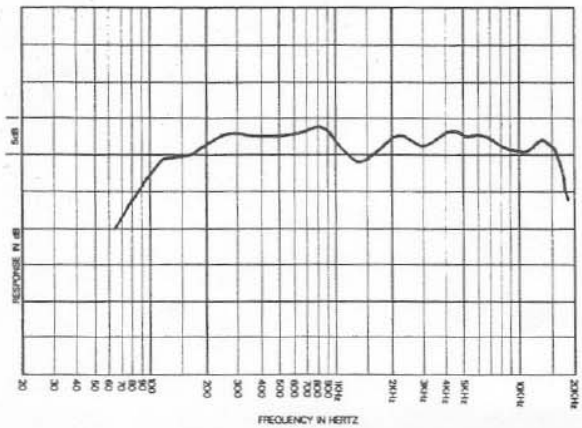

FIGURE 3 –
FM12-3A Frequency Response
(Swept 1/3-Octave Band Pink Noise)

FIGURE 4 –
FM12-2A Polar Response
Octave Bands of Pink Noise,
System Long Axis is Vertical
(5 dB Per Division)

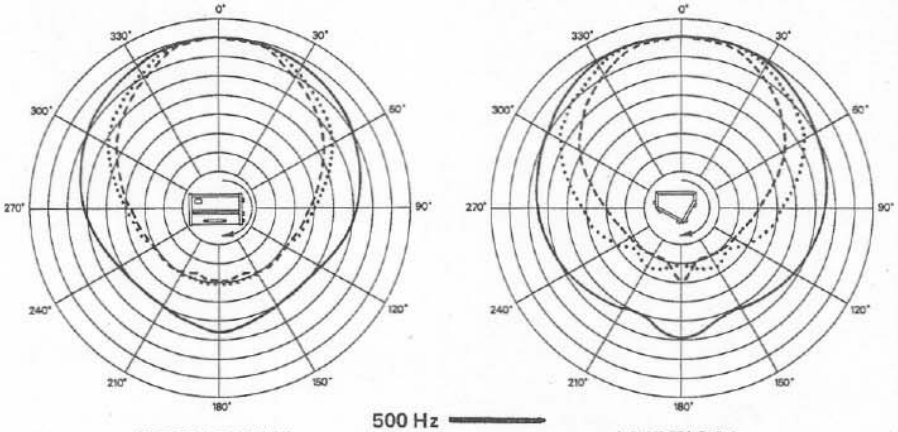

500 Hz
2,000 Hz
8,000 Hz

FIGURE 5 –
FM12-3A Polar Response
Octave Bands of Pink Noise,
System Long Axis is Vertical
(5 dB Per Division)

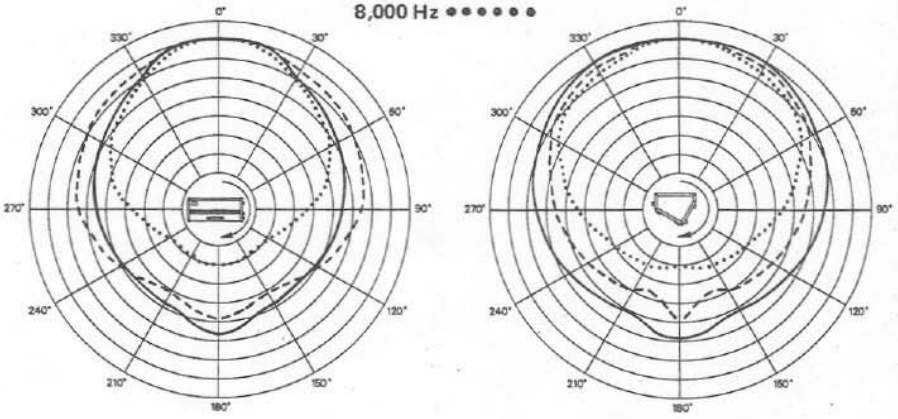

FIGURE 6 –
FM12-2A Beamwidth vs Frequency
(System Long Axis Vertical)

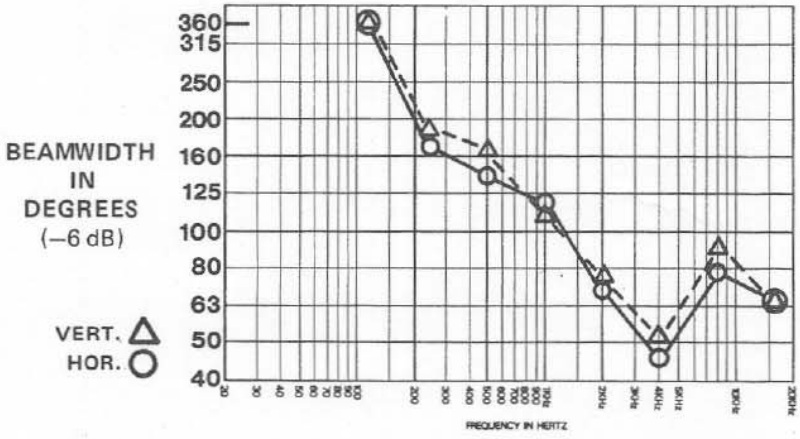

FIGURE 7 –
FM12-3A Beamwidth vs Frequency
(System Long Axis Vertical)

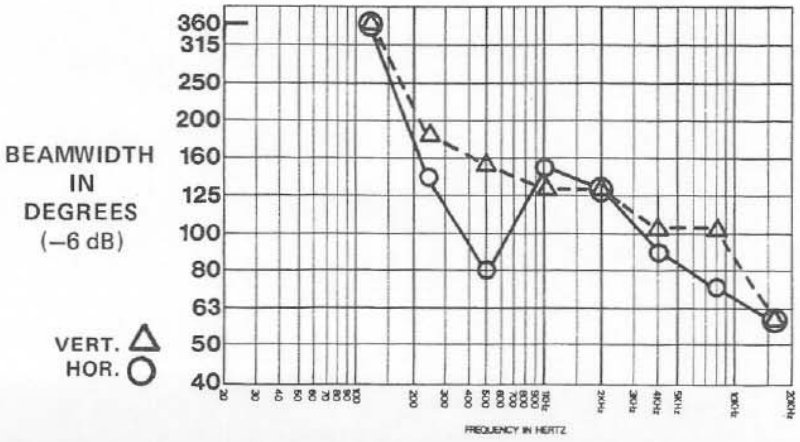

3/4" particle board with protective extruded aluminum trim. Both models are provided with rubber feet on three sides to coincide with the two floor mount and side mount (upright) configurations.

Frequency Response
Frequency response data was measured at 10 feet on axis with 4 volts of swept 1/3 octave random noise. The frequency response curves for the FM12-2A and FM12-3A are shown in Figures 2 and 3.

DISPERSION
The polar frequency response curves for the FM12-2A and FM12-3A are given in Figures 4 and 5. For clarity, only the 500 Hz, 2 kHz, and 8 kHz frequency plots are shown. This data was taken using octave band centered pink noise with 4 volts applied to speakers and measurements were made with the speaker systems mounted in both the horizontal and vertical positions at 10 feet. From this data, the 6 dB down points were obtained and beamwidth versus frequency plots were made. This information is shown in Figures 6 and 7.

POWER HANDLING TEST
Power handling specifications are usually meaningless because they fail to indicate the nature of the test signal and/or how this test signal relates to actual use. Therefore, the Electro-Voice test procedures employed to obtain the claimed power ratings are described in detail. The FM12-2A and FM12-3A have been rigorously tested for power handling capability by the following method.

The output of a pink noise generator is fed to a shaping filter where the frequency spectrum is controlled to be rolled off at 6 dB/octave beginning at 100 Hz and 10 kHz. This shaped signal is then sent to the power amplifier with the clipping level set at ± 55 volts. The output level is adjusted to 28.2 volts (true RMS), driving the nominal 8 ohm speaker system to obtain 100 watts input power to the speaker.

The clipping level of the power amplifier is set to provide a limited peak to valley ratio. This provides a test signal that is far more severe than 100 watts of average program material.

HI-FREQUENCY AUTO LIMITING
An all solid state electronic device designed by Electro-Voice engineers to meet the special demands of high level sound reinforcement. The Hi-Frequency Auto Limiter efficiently protects the tweeter from overloading by limiting tweeter power input to a predetermined safe level. The result is virtual absolute driver protection without audible side effects or loss of sound pressure level. This all solid state device responds instantaneously and is not dependent on slow moving mechanical parts. Hi-frequency auto limiting incorporates six solid state devices and a power resistor with appropriate heat sink.

MOUNTING SPEAKERS ON STAND
One end board on the FM12-2A and FM12-3A contains two 1/4-20 TEENUTS to allow mounting the speakers in a vertical position on a stand. The TEENUTS are spaced 3 inches apart to fit the EV Model 480A or the Atlas SS100 stands. (Overall height of the EV 480A stand is 58 inches and the Atlas SS100 stand is 46 inches).

WARRANTY (Limited) —
Electro-Voice Music Loudspeaker Systems and Accessories are guaranteed for five years from date of original purchase against malfunction due to defects in workmanship and materials. If such malfunction occurs, unit will be repaired or replaced (at our option) without charge for materials or labor if delivered prepaid to the proper Electro-Voice service facility. Unit will be returned prepaid. Warranty does not cover finish or appearance items or malfunction due to abuse or operation at other than specified conditions. Repair by other than Electro-Voice or its authorized service agencies will void this guarantee.

For repair information and service locations, please write: Service Department, Electro-Voice, Inc., 600 Cecil Street, Buchanan, Michigan 49107 (Phone 616/695-6831) or 8234 Doe Avenue, Visalia, CA 93277 (209/625-1330,-1).

Electro-Voice also maintains complete facilities for non-warranty service of E-V products.

Specifications subject to change without notice.

Part Number 530062–124
a Gulton COMPANY ELECTRO-VOICE, Inc., 600 CECIL ST., BUCHANAN, MICH. 49107
MANUFACTURING PLANTS AT ■ BUCHANAN, MICH. ■ NEWPORT, TENN. ■ SEVIERVILLE, TENN. ■ GANANOQUE, ONT. ■ LITHO IN U.S.A.

89060 LIMITER

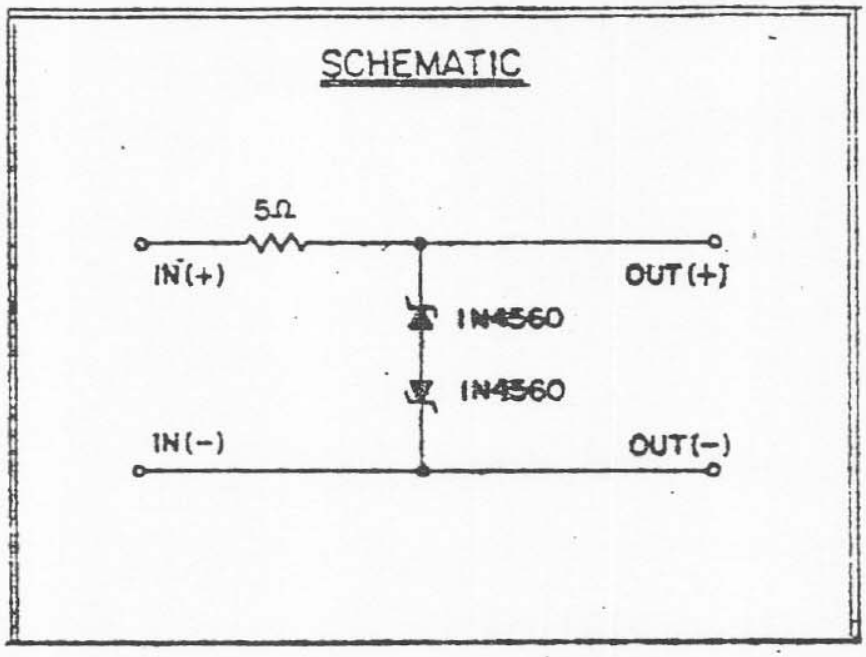

Zener Diode	43297	2 pcs.
5ohm/50W Resistor	46684	1 pc.

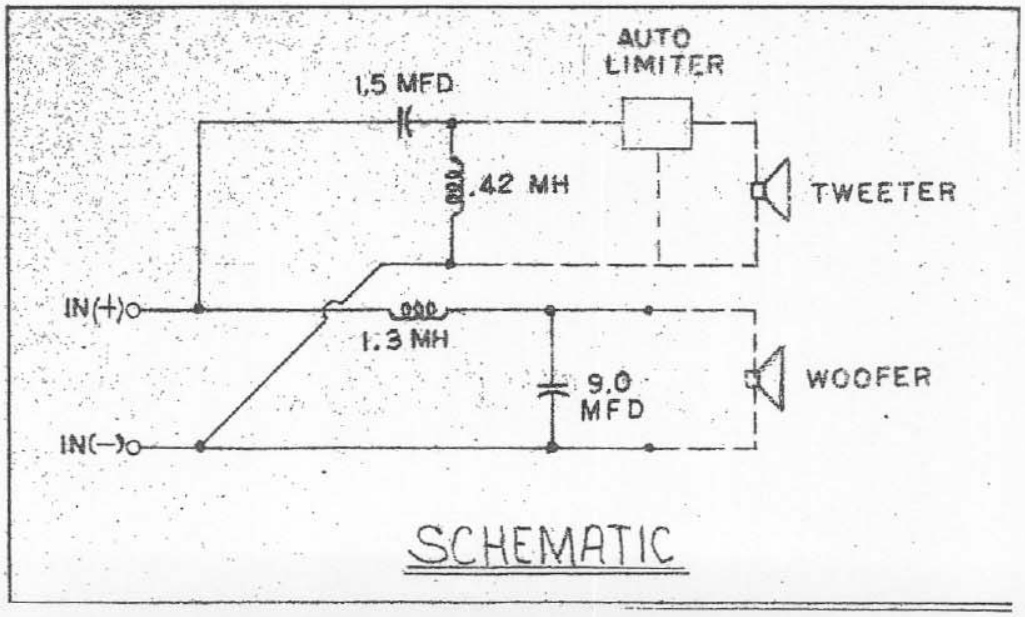

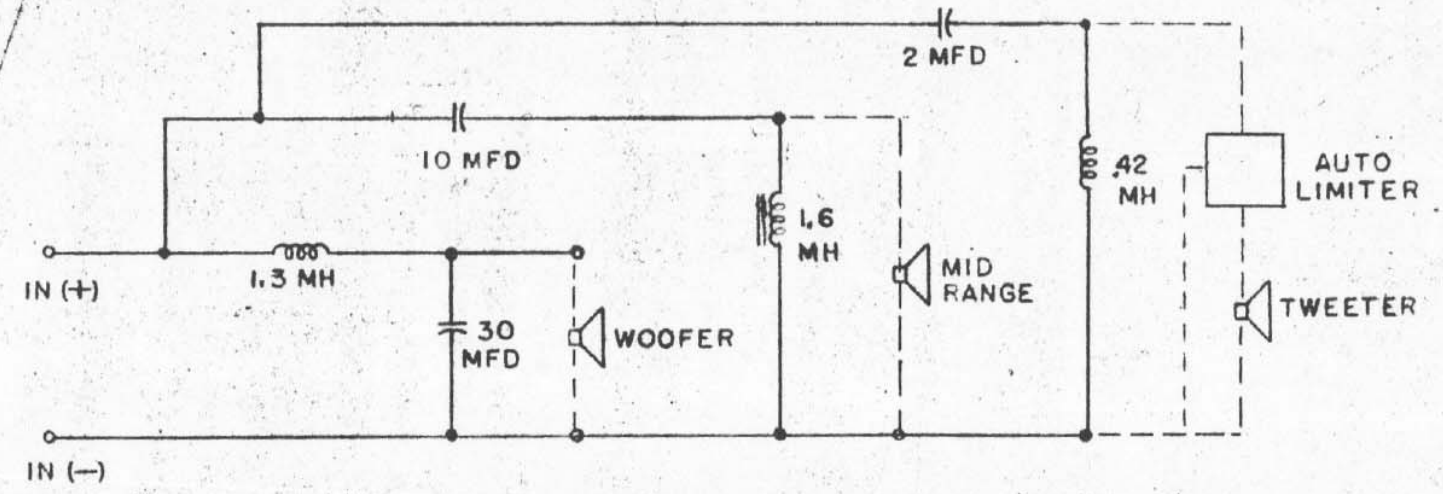

SCHEMATIC FM 12-3