EVX-155

15 Inch Low-Frequency Reproducer

General Product Description

The EVX-155 low-frequency transducer is designed for professional sound reinforcement or studio monitoring applications that require maximum output with low distortion.

The EVX-155 woofer provides unprecedented power capacity, linearity and excursion, made possible by the HeatWick™ total-thermal-engineering design. The proprietary HeatWick design actually "wicks" heat away from the voice coil, significantly increasing power handling and long-term reliability. A special frame extension and elongated pole piece provide a metal surface with close proximity to the entire length of the voice coil, providing a major heat-transfer path. Also, the 100mm (4-in.) diameter voice coil is longer than conventional medium efficiency woofers to give additional power handling and virtually eliminate dynamic-range power compression.

Additionally, a Flux Demodulation Device (FDD™) reduces distortion in the critical mid band by providing a "short-circuit" effect to prevent amplifier signal modulation of the static magnetic field. To further increase reliability, PROTEF™, a Teflon® based coating, is applied to the internal diameter of the FDD™ and top plate. PROTEF™ lubricates any rubbing contact and electrically insulates the coil from the FDD™ and top plate to guard against violent short-term power peaks.

A ribbed, Kevlar® fiber composite cone with an extremely high stiffness-to-weight ratio and exceptional strength gives the EVX-155 increased resistance to cone collapse and deformation, without sacrificing efficiency. A rubber mounting flange gasket provides a reusable seal for front or rear mounting, completely surrounding the frame flange.

Architects' and Engineers' Specifications

The low-frequency transducer shall have a nominal diameter of 381 mm (15 in.), overall depth not greater than 168 mm (6.61 in.), and weigh no more than 10 kg (22 lb). The frame shall be made of die-cast aluminum to resist deformation. The magnetic assembly shall have an extended pole piece to reduce inductive variances with excursion, and provide a symmetrical magnetic field at the voice-coil gap. Two aluminum rings shall encircle the pole piece above and below the magnetic gap, and shall have internal diameters concentric with the internal diameter of the steel top plate. The upper ring shall be part of the loudspeaker frame. Both rings act to reduce flux modulation and provide a heat-transfer path from the outer diameter of the voice coil. The inner diameter of the steel top plate and the lower aluminum ring shall be Teflon® coated.[1]

The voice coil shall be 100 mm (4 in.) in diameter and 20 mm (0.8 in.) in winding length, and shall be made of edge-wound aluminum ribbon. When centered in the magnetic gap, the voice coil shall produce a force of not less than 20.4 newtons (tesla-ampere-meters) with a dc current of 1 ampere.

Performance specifications of a typical production unit shall be as follows: measured sensitivity (SPL at 1 m (3.3 ft) with 1 watt input, 100 to 800 Hz pink noise) shall be at least 98 dB. The half-space reference efficiency shall be at least 4.3%. The usable frequency response shall be 30 Hz to 1,800 Hz, and the nominal impedance shall be 8 ohms. The rated power for the loudspeaker shall be 1,000 watts continuous program power.

The low-frequency transducer shall be the Electro-Voice® EVX-155.

Directional Characteristics

The directional characteristics of the EVX-155 in the TL606A 90-liter (3.2-ft³) vented enclosure were measured by running a set of polar responses in EV's large anechoic chamber. The test signal was octave-band-limited pseudo-random pink noise centered at the ISO standard frequencies.

The curves show horizontal (side-to-side) dispersion when the enclosure's long axis is vertical. The vertical (up-and-down) polar responses deviate only slightly from the horizontal responses due to box geometry. Typical data is provided in Figures 1 and 2, which indicate 6-dB-down beamwidth versus frequency and directivity factor, respectively, for an EVX-155 in the TL606A enclosure.

Electrical Connections

The EVX-155 is fitted with a pair of chrome-plated, frame-mounted connectors with color-coded ends. Electrical connection is made by pushing down, inserting wire completely through the rectangular slot and releasing pressure. One conductor of #9 AWG stranded, #8 AWG solid, a pair of twisted #15 AWG stranded or a pair of #14 AWG solid conductors will fit. A positive electrical signal applied to the red (+) terminal will displace the cone away from the magnet, thus producing a positive acoustic pressure.

Recommended Enclosures

The most extended bass, lowest distortion and best control is usually realized in properly designed vented enclosures. In such designs, the vent, or port, actually provides the lowest octave of output. The vent is driven to full acoustic output by a relatively small motion of the speaker cone itself, acting through the air contained within the enclosure. The excursion of the EVX-155 at these frequencies is much reduced compared to sealed or open-back enclosures, directly reducing harmonic distortion and the possibility of speaker "bottoming." Several specific vented-enclosure recommendations are shown on the previous page. The maximum output is limited by either: (1) the long-term thermal power handling capacity or (2) the speaker's maximum cone-excursion capability, whichever occurs first.

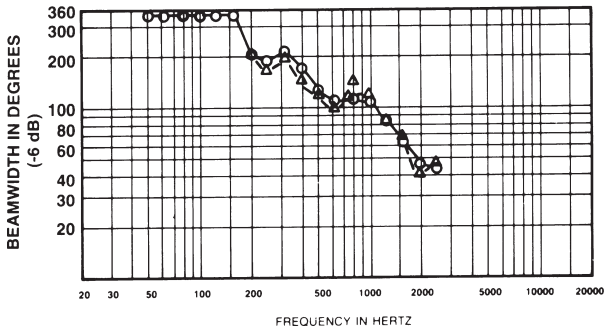

Figure 1. *Beamwidth vs. Frequency*
EVX-155/TL606A In a 90-Liter (3.2-ft³) Enclosure

[1]PROTEF- is covered by U.S. Patent No. 4,547,632;
Teflon® and Kevlar® are registered trademarks of DuPont.

Electro-Voice®

Specifications:

Power Handling: ..... 1000 watts continuous

Per AES2-1984/ANSI S4.26-1984:

50-500 Hz: ..... 600 watts

Sensitivity (SPL at 1 W/1 m), 100-800-Hz average: ..... 98 dB

Impedance Response:

Minimum (Zmin): ..... 7 ohms
Nominal: ..... 8 ohms

Distortion Response (on axis in standard baffle, 10% rated input power):

Second Harmonic:

100 Hz: ..... -45 dB (0.6%)
1,000 Hz: ..... -41 dB (0.9%)

Third Harmonic:

100 Hz: ..... -41 dB (0.9%)
1,000 Hz: ..... -38 dB (1.3%)

Beamwidth (angle included by 6-dB-down points on polar responses for octave bands of pink noise):

500 Hz: ..... 90°
1,000 Hz: ..... 70°
2,000 Hz: ..... 45°

Physical Constants,

Effective Piston Diameter: ..... 318.0 mm (12.5 in.)
Moving Mass (M_{Mo}): ..... 0.069 kg (0.152 lb)
Voice-Coil Winding Depth: ..... 20.3 mm (0.8 in.)
Voice-Coil Diameter: ..... 63.5 mm (2.5 in.)
Voice-Coil Winding Length: ..... 20.3 m (0.80 in.)
Top Plate Thickness at Voice Coil: ..... 8.9 mm (0.35 in.)
BL Factor: ..... 20.4 tesla meter

Thiele-Small Parameters (broken in):

f_S : ..... 35.4 Hz
V_{AS}: ..... 220 liters (7.77 ft³)
Q_{ES}: 0.216
O_{MS}: 5.56
Q_{TS}: 0.208
R_E: ..... 5.0 ohms
η_0: 4.32%
S_D: ..... 0.079 m² (123 in.²)
M_{MD}: ..... 0.127 kg (0.280 lb)
L_E : ..... 1.6 mH
C_{MS}: ..... .0.200 mm/N
R_{MS}: ..... 6.86 mechanical ohms
$P_{E(max)}$: ..... 600 watts
X_{MAX} [1]: ..... 6.4 mm (0.25 in.)
X_{lim} [2]: ..... 25 mm (0.98 in.)

Connector Type:

Push Terminals for bare wires.

Polarity:

A positive voltage applies to the positive (red) terminal produces a positive pressure at the front of the cone.

Additional Descriptive Information:

Magnet Weight: ..... 3.2 kg (7.0 lb)
Magnet Material: ..... Barium ferrite
Frame: ..... Cast aluminum
Frame Finish: ..... Textured black epoxy
Plating of Steel Parts: ..... Bright Cadmium
Voice-Coil Material: ..... Aluminum
Voice-Coil Insulation: ..... Polyimide 220°C rating
Voice-Coil Form: ..... Polyimide
Back Cover: ..... Black, advanced synthetic elastomer

Net Weight: ..... 10 kg (22 lb)

1. X_{max} is the one-way peak excursion which produces 10% THD of the current waveform when driven at f_s.
2. Displacement limit is the one-way peak excursion which, when exceeded, will cause physical damage to the drive mechanism.

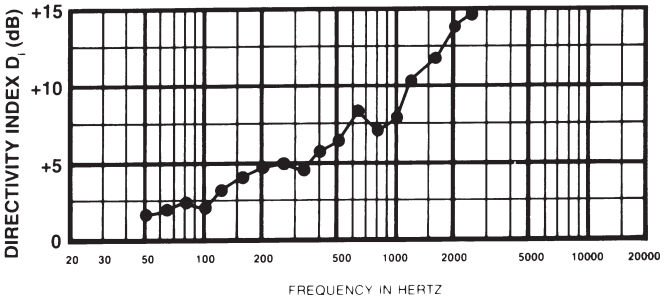

Figure 2.
Directivity Index vs. Frequency
EVX-155/TL606A In a 90-Liter (3.2-ft³) Enclosure

Dimensions: (in)	
A	15.28
B	0.585
C	8.188
D	0.50
E	6.71
F	14.60
G	0.281 x 8

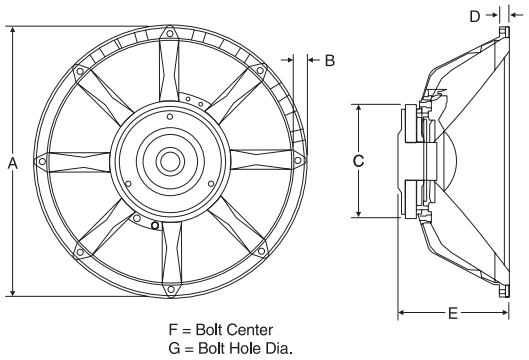

Dimensions

USA 12000 Portland Ave South, Burnsville, MN 55337, Phone: 952-884-4051, FAX: 952-884-0043
Canada 705 Progress Avenue, Unit 46,Scarborough, Ontario, Canada, M1H2X1,Phone: 416-431-4975, 800-881-1685, FAX: 416-431-4588
Germany Hirschberger Ring 45, D94315, Straubing, Germany, Phone: 49 9421-706 0, FAX: 49 9421-706 287
France Parc de Courcerin, Alle Lech Walesa, Lognes, 77185 Marne La Vallee, France, Phone: 33/1-6480-0090, FAX: 33/1-6480-4538
Australia Unit 23, Block C, Slough Business Park, Slough Avenue, Silverwater, N.S.W. 2128, Australia, Phone: 61/2-9648-3455, FAX: 61/2-9648-5585
Hong Kong Unit E & F, 21/F, Luk Hop Industrial Bldg., 8 Luk Hop St., San PO Kong, Kowloon, Hong Kong, Phone: 852-2351-3628, FAX: 852-2351-3329
Japan 5-3-8 Funabashi, Setagaya-ku, Tokyo, 156-0055 Japan, Phone: +81 (0) 3-5316-5020, FAX: +81 (0) 3-5316-5031
Singapore 3015A Ubi Rd 1, 05-10, Kampong Ubi Industrial Estate, Singapore 408705, Phone: 65-746-8760, FAX: 65-746-1206
Mexico Av. Parque Chapultepec #66-201, Col. El. Parque Edo. Mex. 53390, Phone: (52) 5358-5434, FAX: (52) 5358-5588
UK 4, The Willows Centre, Willow Lane, Mitcham, Surrey CR4 4NX, UK, Phone: 44 181 640 9600, FAX: 44 181 646 7084
Africa, Mid-East 12000 Portland Ave South, Burnsville, MN 55337, Phone: 952-887-7424, FAX: 952-887-9212
Latin America 12000 Portland Ave South, Burnsville, MN 55337, Phone: 952-887-7491, FAX: 952-887-9212

www.electrovoice.com • Telex Communications, Inc. • www.telex.com

© Telex Communications, Inc. 11/2006

Part Number 38109-949 Rev B

Electro-Voice®

U.S.A. and Canada only.
For customer orders, contact the Customer Service department at 800/392-3497 Fax: 800/955-6831
For warranty repair or service information, contact the Service Repair department at 800/685-2606
For technical assistance, contact Technical Support at 866/78AUDIO
Please refer to the Engineering Data Sheet for warranty information.
Specifications subject to change without notice.