Specification Sheet FRi-181S

F R i

SPEAKER

SYSTEMS

General Product Description

A dedicated passive 18-inch subwoofer system in a vented slot-loaded trapezoidal enclosure. Includes passive crossover to allow use with full-range signal. Secondary input connectors bypass crossover to accept bandpassed signal. Designed as a suspendible enclosure. Cloth coverable steel grille.

Applications

The FRi-181S provides high output low bass response in an enclosure designed to compliment the other models in the FRi line. The vented slot loaded design extends LF response and improves output. The versatile, compact enclosure features a comprehensive system of 3/8-16 thread mounting/suspension points, to allow vertical or horizontal mounting. The FRi series is 28-inches high, creating a uniform look in arrays. Five year warranty.

Applications include:

Stadiums	Arenas
Houses of Worship	Discos
Live music clubs	Gymnasiums

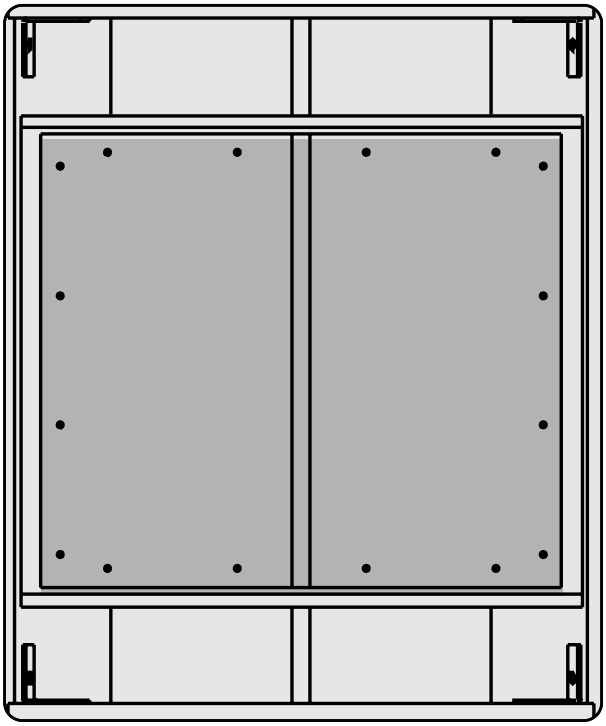

Speaker Description

Part Number	1152-3340
Components & Loading	DL18BFH 18-inch woofer in vented slot load design
System Configuration	Dedicated Subwoofer
Powering Configuration	Passive or Biamp
Recommended High-Pass Frequency (12 dB/octave min.)	40 Hz
Cabinet Type (shape)	Trapezoidal
Enclosure Materials	13-ply Birch plywood
Finish	Black Acrylic
Connectors	Two barrier strips
Suspension Hardware	(16) 3/8-16 threaded mounting/suspension points (4 each top, bottom, sides)
Grille	Powder-coated perforated 16GA steel
Options	WH - white acrylic finish UN - unfinished

Specification Sheet FRi-181S

Speaker Characteristics

Frequency Response (passive)			
±3 dB		45 Hz-160 Hz	
-10 dB		36 Hz-250 Hz	
Axial Sensitivity (full-space/half-space)			
(SPL/1 watt/1m)		97 dB/100 dB	
Impedance		8 ohms	
Power Handling			
Passive	Long-term (EIA)	400 watts	
	Short-term peak	1,600 watts	
Calculated Maximum Output SPL (full-space/half-space)			
Peak		129/132 dB	
Long Term		123/126 dB	
Nominal Coverage Angle			
Horizontal	(-6 dB)	300°	
Vertical	(-6 dB)	270°	
Dimensions			
Height		27.92 in.	(711 mm)
Width in front		23.51 in.	(597 mm)
Width in back		15.93 in.	(404 mm)
Depth		30.00 in.	(762 mm)
Trapezoid Angle		7.5° per side	
Weights			
Net Weight		100 lb.	(45.5 kg)
Shipping Weight		110 lb.	(50.0 kg)

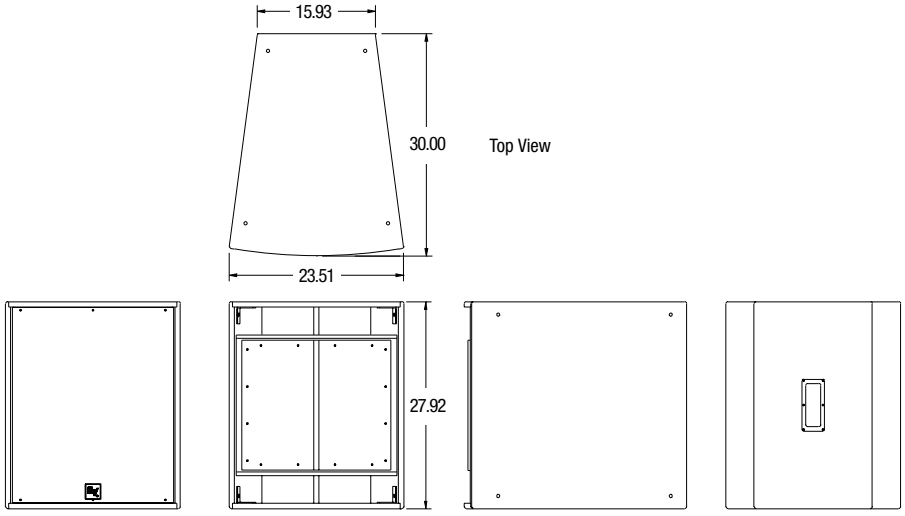

Front View *(with grille)* | Front View *(with grille removed)* | Side View *(with grille removed)* | Back View

Architectural Specifications

The subwoofer loudspeaker system shall incorporate one passive or biampable 18″ LF transducer mounted in a vented, slot-loaded enclosure tuned for optimum low frequency response.

System frequency response shall vary no more than ±3 dB from 45 Hz to 160 Hz measured on axis. The loudspeaker shall produce a sound pressure level (SPL) of 97 dB (100 dB half-space) on axis at 1 meter with a power input of 1 watt, and shall be capable of producing a peak output of 129 dB (132 dB half-space) on axis at 1 meter. The loudspeaker shall handle 400 watts of amplifier power long-term (EIA Standard), and shall have a nominal impedance of 8 ohms.

The loudspeaker enclosure shall be trapezoidal in shape. It shall be constructed of 13 ply void-free cross-grain-laminated Birch plywood and shall employ extensive internal bracing. It shall be finished in black acrylic. Input connectors shall be two at 2 terminal barrier strips. A total of sixteen 3/8-16 threaded mounting/suspension points (4 each top, bottom, sides) shall be provided. The front of the loudspeaker shall a cloth coverable powder-coated perforated 16 GA steel grille.

The sub bass loudspeaker shall be the Electro-Voice model FRi-181S.

EV EVERYWHERE℠

USA 12000 Portland Ave South, Burnsville, MN 55337, Phone: 952-884-4051, FAX: 952-884-0043
Canada 705 Progress Avenue, Unit 46, Scarborough, Ontario, Canada, M1H2X1, Phone: 416-431-4975, 800-881-1685, FAX: 416-431-4588
Switzerland Keltenstrasse 11, CH-2563 IPSACH, Switzerland, Phone: 41/32-331-6833, FAX: 41/32-331-1221
Germany Hirschberger Ring 45, D94315, Straubing, Germany, Phone: 49 9421-706 392, Fax: 49 9421-706 287
France Parc de Courcerin, Allee Lech Walesa, Lognes, 77185 Marne La Vallee, France, Phone: 33/1-6480-0090, FAX: 33/1-6480-4538
Australia Unit 23, Block C, Slough Business Park, Slough Avenue, Silverwater, N.S.W. 2128, Australia, Phone: 61/2-9648-3455, FAX: 61/2-9648-5585
Hong Kong Unit E & F, 21/F, Luk Hop Industrial Bldg., 8 Luk Hop St., San PO Kong, Kowloon, Hong Kong, Phone: 852-2351-3628, FAX: 852-2351-3329
Japan 2-5-60 Izumi, Suginami-ku, Tokyo, Japan 168, Phone: 81-3-3325-7900, FAX: 81-3-3325-7789
Singapore 3015A Ubi Rd 1, 05-10, Kampong Ubi Industrial Estate, Singapore 408705, Phone: 65-746-8760, FAX: 65-746-1206
Mexico Av. Parque Chapultepec #66-201, Col. El. Parque Edo. Mex. 53390, Phone: (52) 5358-5434, FAX: (52) 5358-5588
UK 4, The Willows Centre, Willow Lane, Mitcham, Surrey CR4 4NX, UK, Phone: 44 181 640 9600, FAX: 44 181 646 7084
Africa, Mid-East 12000 Portland Ave South, Burnsville, MN 55337, Phone: 952-887-7424, FAX: 952-887-9212
Latin America 12000 Portland Ave South, Burnsville, MN 55337, Phone: 952-887-7491, FAX: 952-887-9212

www.electrovoice.com • Telex Communications, Inc. • www.telex.com

©Telex Communications, Inc. 6/2000 Part Number 535885-4.00

U.S.A. and Canada only.

For customer orders, contact the Customer Service department at 800/392-3497 Fax: 800/955-6831

For warranty repair or service information, contact the Service Repair department at 800/685-2606

For technical assistance, contact Technical Support at 800/392-3497

Please refer to User Guide Sheet for warranty information.

Specifications subject to change without notice.