RE92PT

Unidirectional Condenser Lavalier Microphone, Unterminated

Key Features:

- **Wide, Smooth Frequency Response**
- **Cardioid Polar Pattern**
- **Includes Two-Stage, Press-on Windscreen**
- **Includes Both Single and Dual Mic Tie Clips**

General Description:

The Electro-Voice® model RE92PT is a professional quality miniature cardioid, electret condenser lavalier microphone. It is designed for unobtrusive miking of speech and instruments, making it an excellent choice for use in many broadcast, stage performance, and presentation purposes. Its small size makes the RE92PT ideal for theatre, interviews, public address systems, and houses of worship. The RE92PT has a cardioid polar pattern for high gain before feedback. The RE92PT condenser element provides clear and natural sound reproduction. The included two-stage windscreen minimizes wind noise and popping. The RE92PT comes supplied with 10 feet of cable (un-terminated), and both single and dual tie clasps with a non-reflecting black finish.

Technical Specifications:

Generation Element:	Self-Biased condenser, back electret 2-micron thick, gold sputtered diaphragm
Frequency Response:	40 Hz to 20,000 Hz (see chart)
Polar Pattern: (see chart)	Cardioid
Sensitivity, Open Circuit Voltage, 1 kHz:	5.6mV/Pascal
Clipping Level (1% THD):	>135 dB SPL
Equivalent Noise:	<30 dB SPL “A” weighted (0 dB=20 micropascals)
Dynamic Range:	>105 dB
Output Impedance, 1 kHz:	1000 ohms
Power Requirements:	5 VDC
Current Consumption:	< 500 uA
Dimensions:	Diameter = 0.412" (10.5 mm) Length = 0.948" (24.1 mm), less strain relief
Cable:	0.100" (2.54 mm) diameter x 10 ft (3.0 m) long
Connector Wiring:	Shield - Ground White - Audio Red - Bias Voltage
Accessories Furnished:	Two Stage Windscreen Single Tie Clip Dual Tie Clip
Color:	Nonreflecting black
Environmental Conditions:	Relative Humidity 0-50%: -29° to 74°C (-20° to 165°F) Relative Humidity 0-95%: -29° to 57°C (-20° to 135°F)
Net Weight:	1.8 oz. (50 grams)

Electro-Voice®

Frequency Response:

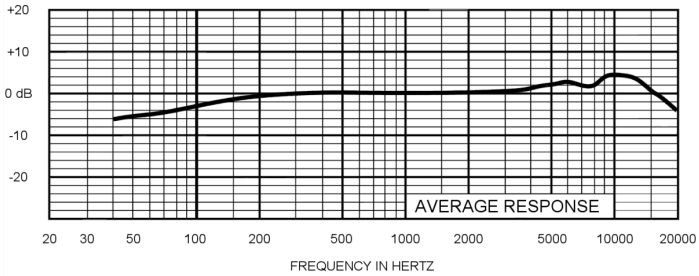

Polar Response:

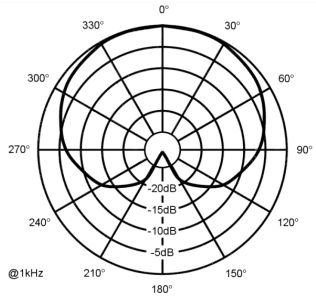

Application Notes:

Using the Windscreen

The RE92PT includes a windscreen that can be used anytime wind noise or breath pop is a problem. To install the windscreen, simply press it on the top of the microphone. The windscreen has an internal frame that includes a stop to help positioned the windscreen correctly. When installing the windscreen, make sure to push it down on the microphone as far as it will go. This will ensure that the frame inside the windscreen doesn't cover any of the acoustic side ports on the microphone.

Microphone Positioning (For Best Results)

Best results will be achieved with the mic positioned 3 to 6 inches below the neckline. Typical locations are on the lapel, shirt collar, or on the shirt directly below the chin. You should avoid covering the microphone with any cloth, since this could change the frequency response characteristics of the microphone.

If mechanical noise pickup from the cable is a problem, it can be minimized by looping the cable up and through the tie clip as shown.

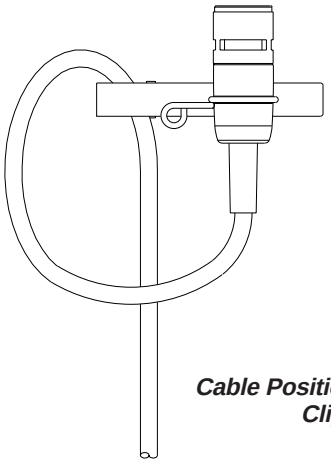

Cable Position with Tie Clip

Dimensions:

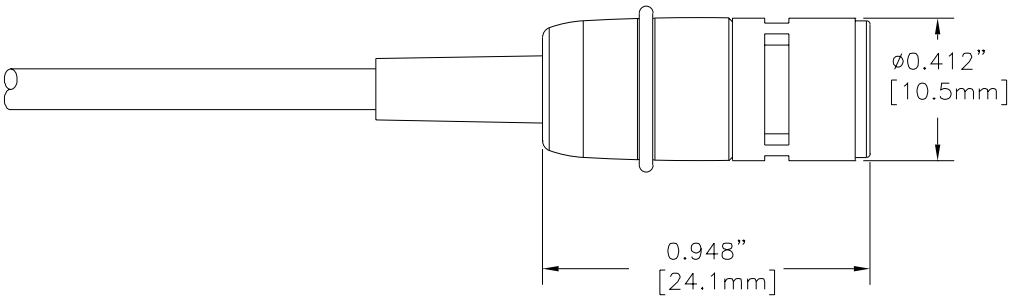

Electro-Voice®

12000 Portland Avenue South, Burnsville, MN 55337
Phone:952/884-4051, Fax:952/884-0043
www.electrovoice.com

© Telex Communications, Inc. 12/2003

Part Number 38110-288 Rev A

U.S.A. and Canada only. For customer orders, contact Customer Service at:
800/392-3497 Fax: 800/955-6831
Europe, Africa, and Middle East only. For customer orders, contact Customer Service at:
+ 49 9421-706 0 Fax: + 49 9421-706 265
Other International locations. For customer orders, contact Customer Service at:
+ 1 952 884-4051 Fax: + 1 952 736-4212
For warranty repair or service information, contact the Service Repair department at:
800/553-5992 or 402/467-5321
For technical assistance, contact Technical Support at: **800/392-3497 or 952/736-4656**

Specifications subject to change without notice.