Electro-Voice®

# Sb180

## Subwoofer

- EVX-180B woofer for reliable, extended low-frequency output
- Subwoofer for augmenting the low-frequency performance of EV stage systems
- Natural high-frequency roll-off
- 600-watt continuous, 1,200-watt program power capacity
- Rugged, road-ready cabinet, metal grille, and painted finish
- Neutrik Speakon® inputs
- 1 3/8-inch stand mount in top allows use of satellite system
- 34-inch long 1 3/8-inch mounting pole included

### Description

The Electro-Voice Sb180 is a 600-watt subwoofer loudspeaker system which combines the attributes of both horn-loaded and vented-box designs. It utilizes the unique SubScoop™ cabinet construction with a EVX-180B woofer, as used in the X-Array® concert systems. The design behaves like a horn over much of its range, but without the time delay and weight problems usually associated with conventional designs. Vented-box principles take over for the lowest octave and assist in producing exceptionally high levels of clean, punchy bass from a subcompact box. The reverse woofer orientation has been used to optimize the rear chamber volume and decrease the horn flare rate for extended low-end performance.

The Sb180 can be used to augment the bass performance of any Electro-Voice stage system. (This may involve the use of appropriate electronics and crossovers.) A $1^3/_8$-in. stand-mount receptacle on the top surface of the Sb180 allows satellite speaker systems such as the Sx500 and Sx300 to be used (see Figure 4). A 34-inch mounting pole is included with the Sb180.

### Use in Multiples

The Sb180 may be used in multiples to increase acoustic output. A 6-dB increase in maximum acoustic output occurs when two speaker systems are placed side by side and paralleled, yielding a 4-ohm load. For operation at very-low frequencies, the woofer cones "mutually couple," acting as one system with twice the effective cone area and power-handling capacity of a single system. Increasing the cone area doubles the efficiency, providing a 3-dB increase in sound pressure level. The doubled power capacity provides the potential for an additional 3-dB gain in maximum acoustic output.

Mutual coupling occurs when the frequency is such that the center-to-center distance between the two woofer manifolds is less than about one-half wavelength. When the distance is greater than one-half wavelength, as would occur if two Sb180's were widely spaced, the level increase tends to be limited to the 3-dB power-handling increase.

The woofer is connected using one of the Neutrik Speakon® jacks marked "input." Electro-Voice recommends the Neutrik NL4MPR-V connector be used in most high-power situations. A parallel woofer can be connected using the other connector. Care must be taken not to abuse the amplifier by connecting impedances which are too low.

### Crossovers and Amplifiers

To optimize performance, the Sb180 should be used in conjunction with an active crossover with a minimum slope of 12-dB per octave and a crossover frequency in the range of 100 to 250 Hz. Due to the high efficiency of the Sb180, less amplifier input is needed to achieve a given sound output level. The high power-handling capacity of the Sb180 permits the use of amplifiers with a rating of up to 1,200 watts rms into 8 ohms.

### Speaker Protection

When in the vented-box mode, the SubScoop,™ like all other vented systems, experiences rapidly increasing cone excursion below the box-tuning frequency. The acoustic output is also decreasing rapidly; therefore, it is sensible to protect the Sb180 and maximize the power output of the subwoofer by inserting an active 32-Hz high-pass filter with a slope of at least 12-dB per octave into the circuit. Such subpassband filters are found in many commercially available crossovers and equalizers including items manufactured by Electro-Voice.

## Frequency Response

The Sb180's axial frequency response was measured in Electro-Voice's large anechoic chamber at a distance of 3 meters (10 feet) with a swept sine-wave input. Figure 1 has been averaged and corrected for 1 watt at 1 meter.

## Enclosure Construction

Intended to be used as a portable speake system, the Sb180 is ruggedly constructed of $^3/_4$-inch void-free plywood. All joints are dado cut, and the cabinet is finished with a rugged paint finish that is both attractive and highly durable. A full-length steel grille protects the woofer from damage. Heavy-duty, firmly secured rubber feet and recessed handles complete the picture, ensuring that the Sb180 speaker system is ideally suited for a long and reliable life on the road.

## Sb180 Connections

The Sb180 is equipped with two paralleled Neutrik Speakon® NL4MPR-V connectors, selected for their ability to reliably deliver to the speaker components the high currents delivered by high-wattage power amplifiers. The NL4FC is a four-pin connector, and Figure 5 shows how the usual two-conductor speaker cable should be wired to pins 1+ and 1– of the connector.

Note also that Neutrik Speakon® cables, connectors and wiring accessories are available from Pro Co Sound, Inc. and Whirlwind Music Distributors, Inc. To find your local Pro Co, Whirlwind or Neutrik dealer, contact:

**Pro Co Sound, Inc.**
135 E. Kalamazoo Ave.
Kalamazoo, MI 49007
616/388-9675

**Whirlwind Music Distributors, Inc.**
P.O. Box 1075
Rochester, NY 14603
716/663-8820

**Neutrik USA, Inc.**
195-S3 Lehigh Ave.
Lakewood, NJ 08701
908/901-9488

## Use with Satellite Speaker Systems

The $1^3/_8$-in. stand mount in the top surface of the Sb180 can be used with any length of standard $1^3/_8$-in. tube. Care should be taken to ensure that the Sb180 is used on a flat and level surface. Electro-Voice strongly recommends that the top of the satellite speaker be no more than 8 feet (244 cm) above the ground and weigh no more than 75 pounds (34 kg). It is the responsibility of the user to ensure that the system is safe and stable. Do not use where the system can be easily knocked over. A 34-inch mounting pole is included with the Sb180.

## Service

In the unlikely event the Sb180 requires service, the woofer can be replaced or serviced from the front. A service data sheet is available from Electro-Voice.

## Power-Handling Test

Electro-Voice components and systems are manufactured to exacting standards, ensuring they will hold up, not only through the most rigorous of power tests, but also through continued use in arduous, real-life conditions. The EIA Loudspeaker Power Rating Full Range (ANSI/EIA RS-426-A 1980) uses a noise spectrum which mimics typical music and tests the thermal and mechanical capabilities of the components. Electro-Voice will support relevant additional standards as and when they become available. Extreme, in-house power tests, which push the performance boundaries of the woofers, are also performed and passed to ensure years of trouble-free service.

Specifically, the Sb180 passes ANSI/EIA RS-426-A 1980 with the following values:

$R_{SR}$ = 6.9 ohms (1.15 x $R_E$)
$P_{E(MAX)}$ = 600 watts
Test voltage = 64.34 volts rms,
128.7 volts peak

The "peak" power-handling capacity of a woofer is determined by the peak test voltage amount. For the Sb180, a 128.7-volt peak test voltage translates into 2,400-watts short-term peak power-handling capacity. This is the equivalent of four times the "average" power-handling capacity, and is a peak that can be sustained for only a few milliseconds. However, this sort of short duration peak is very typical in speech and music. Provided the amplifier can reproduce the signal accurately, without clipping, the woofer will also perform accurately and reliably, even at these levels.

## Architects' and Engineers' Specifications

The loudspeaker shall be a horn-loaded type. The low frequencies shall be reproduced with a 600-watt (ANSI/EIA RS-426-A 1980) EVX-180B 460-mm (18-in.) woofer. The system will reproduce the frequencies from 33 to 250 Hz. The system shall be capable of producing average sound levels in excess of 128 dB in the long term, and short-term peaks of 135 dB.

The enclosure shall be constructed of black, painted, multilayer plywood and have a metal grille which attaches with six screws. The dimensions shall be 603.3 mm (23.75 in.) tall, 571.5 mm (22.5 in.) wide and 806.5 mm (31.75 in.) deep. The system shall weigh 43 kg (102 lb). Neutrik Speakon® connections shall be provided.

A $1^3/_8$-in. stand mount capable of supporting 75 pounds (34 kg) will be provided in the top surface of the Sb180 enclosure.

The loudspeaker system shall be the Electro-Voice Sb180 subwoofer.

## Limited Warranty

Electro-Voice products are guaranteed against malfunction due to defects in materials or workmanship for a specified period, as noted in the individual product-line statement(s) below, or in the individual product data sheet or owner's manual, beginning with the date of original purchase. If such malfunction occurs during the specified period, the product will be repaired or replaced (at our option) without charge. The product will be returned to the customer prepaid. **Exclusions and Limitations:** The Limited Warranty does not apply to: (a) exterior finish or appearance; (b) certain specific items described in the individual product-line statement(s) below, or in the individual prod-

**Figure 3—Dimensions**

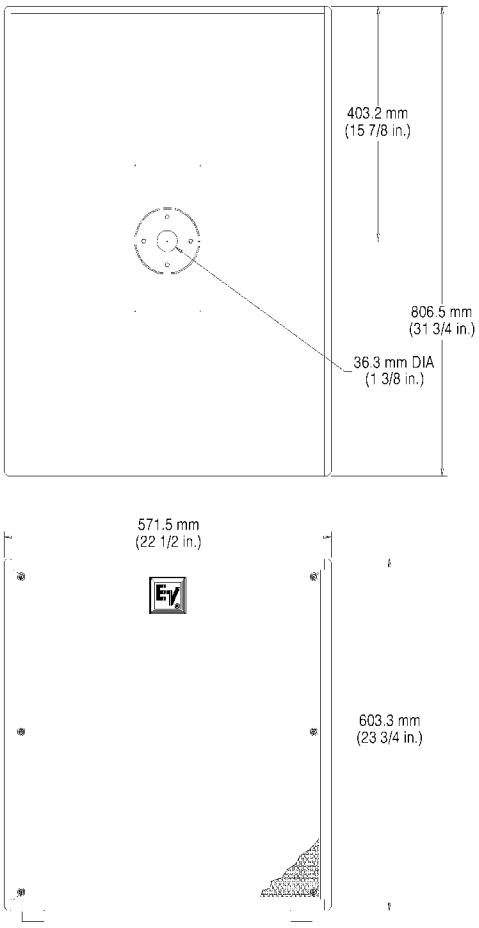


**Figure 4—Using the Sb180 with a Satellite Speaker System**

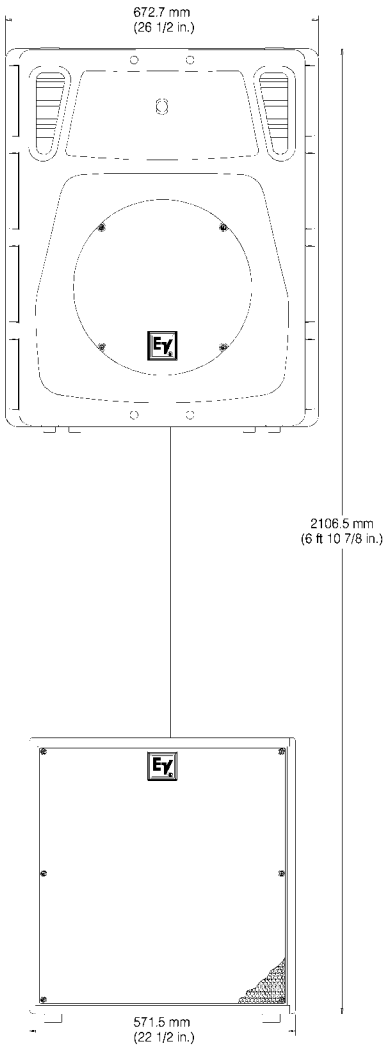


**Figure 5—Two-Conductor Cable Configurations for Sb180 Subwoofer Using Neutrik Speakon® NL4FC Four-Pin Connector**

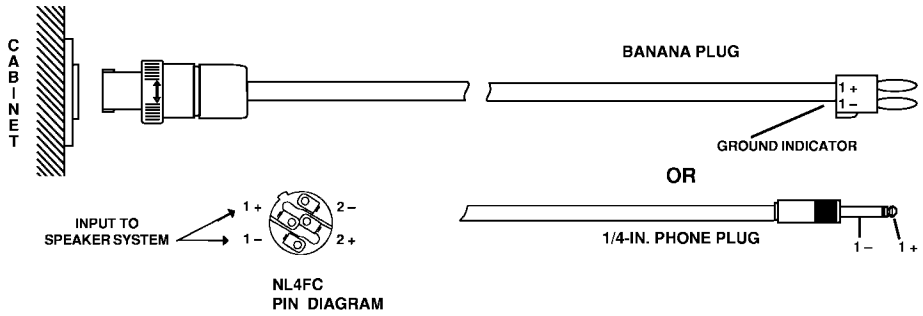


Sb180 Subwoofer

## Specifications

**Typical Axial Frequency Response (swept one-third-octave pink noise, anechoic environment, 4 volts at 10 feet, normalized for 1 watt/1meter; see Figure 1):**
40-250 Hz

**Low-Frequency 3-dB-Down Point:**
40 Hz

**Usable Low-Frequency Limit (10-dB-Down Point):**
31 Hz

**Half-Space Reference Efficiency:**
6.0%

**Long-Term Average Power-Handling Capacity per ANSI/EIA RS-426-A 1980 (see Power-Handling Capacity section):**
600 watts

**Maximum Woofer Acoustic Output:**
36 watts

**Sensitivity (SPL at 1 meter, 1 watt input, anechoic environment, band-limited pink noise signal, 50 to 200 Hz):**
99 dB

**Dispersion Angle Included by 6-dB-Down Points on Polar Responses:**
Essentially omnidirectional

**Distortion, 0.1 Full Power Input (see Figure 2),**
**Second Harmonic,**
**100 Hz:** –52 dB, 0.25%
**Third Harmonic,**
**100 Hz:** –44 dB, 0.63%

**Transducer Complement:**
EVX-180B

**Box Tuning Frequency:**
38 Hz

**Recommended Crossover Frequency:**
250 Hz or below

**Recommended Crossover Slope:**
12 dB per octave

**Impedance,**
**Nominal:**
8 ohms
**Minimum:**
6.1 ohms

**Input Connectors:**
Two Neutrik Speakon® NL4MPR-V

**Mounting:**
Top surface contains stand mount receptacle for use with satellite speaker system

**Materials,**
**Enclosure:**
Black, texture painted ¾-in. void-free plywood
**Grille:**
Black perforated metal

**Enclosure Dimensions (see Figure 3),**
**Height:**
603.3 mm (23.75 in.)
**Width:**
571.5 mm (22.5 in.)
**Depth:**
806.5 mm (31.75 in.)

**Net Weight:**
46.3 kg (102lb)

**Shipping Weight:**
50.9 kg (112 lb)

Electro-Voice®
600 Cecil Street, Buchanan, MI 49107
616/695-6831, 616/695-1304 Fax



©Telex Communications, Inc., 1999 • Litho in U.S.A.

Part Number 534853 — 9927