QRX-212H

Electro-Voice

- Fully rotatable asymmetrical horn for use in any cabinet position
- Tapered Transducer Drive provides smooth coverage
- Available in black and by special order in white
- Low ceiling height requirement
- Externally switchable biamped or passive operation

The QRx-212H/75 is two-way, full-range loudspeaker system incorporating two 12-inch woofers and a 3-inch voice coil compression driver on an asymmetrical 75-degree x 50-degree fully rotatable constant-directivity horn. In factory delivered position when used horizontal, this provides a 15-degree up/35-degree down vertical coverage pattern. The multi-angle cabinet design allows this system to easily conform to limited space clearances. The fully rotatable horn allows optimal coverage regardless of cabinet position. The configuration of horn in the center of two LF transducers each driven by different frequencies provides smooth horizontal coverage. The QRx-212H/75 is a good solution for medium size rooms and audiences as a main PA providing moderate levels with good bass response and added punch in the lower and mid frequencies, satisfying most DJ and live band applications. The asymmetrical horn can allow a single box to direct the high frequencies as needed, as well as streamline multi-cabinet arrays when rotated by extending horizontal coverage while minimizing overlapping and allowing tighter packs between the cabinets. The small height requirement makes it ideal for dance floor installations. The addition of the QRx118 or QRx218 subwoofer completes the perfect high level dance rig. The M212 processing module for EV's Modular Precision Series Amplifiers Provides optimized processing for full-range use, or in any combination with QRx subwoofers.

Technical specifications

System Configuration:	Dual Two-Way, Full-Range
Freq. Response (-3 dB):	75 Hz - 15 kHz[1], 55 Hz - 15 kHz[2]
Freq. Response (-10 dB):	52 Hz - 18 kHz[1], 45 Hz - 18 kHz[2]
Recommended High-Pass Freq.:	45 Hz, 12 dB/octave minimum
Recommended Crossover Freq. Range:	1200 Hz, 24 dB/octave
Axial Sensitivity, SPL:	Passive: 100 dB (1 watt@1m) Biamp (LF/HF): 100/112 dB (1 watt@1m)
Max Calculated SPL:	Long Term: 127 dB Peak: 133 dB
Continuous Power Handling:	Passive - 600 watts Bi-amp - 600 watts, 75 watts
Peak Power Handling:	Passive - 2,400 watts Bi-amp - 2,400 watts, 300 watts
LF Transducer:	1 x DL12ST 1 x DL12BFH
HF Transducer:	DH7, 3-inch Titanium Diaphragm
Coverage:	75° Hor, 15° up, 35° down (rotatable)
Impedance:	Passive: ohms Biamp: 6HF - 8 ohms, LF - 6 ohms
Enclosure:	13-Ply Birch Plywood

Grille:	Powder-Coated 16-GA Steel, Fabric Backed
Connectors:	(2) Neutrik Speakon NL4's
Dimensions (H x W x D):	15.5 in x 39.0 in x 14.9 in (394 mm x 990 mm x 37 8mm)
Net Weight:	84 lb (38 kg)
Shipping Weight:	92 lb (42 kg)

1. Full Space
2. Half Space

System overview

Frequency Response and Impedance:

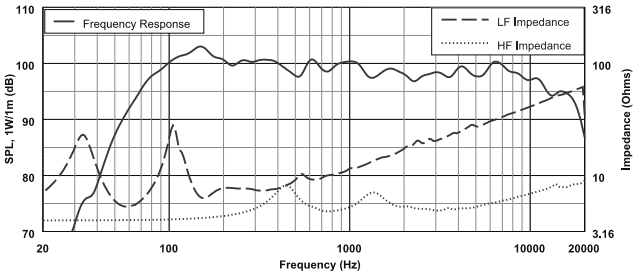

Beamwidth:

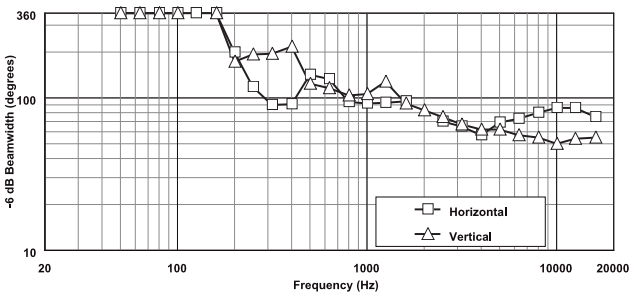

Directivity:

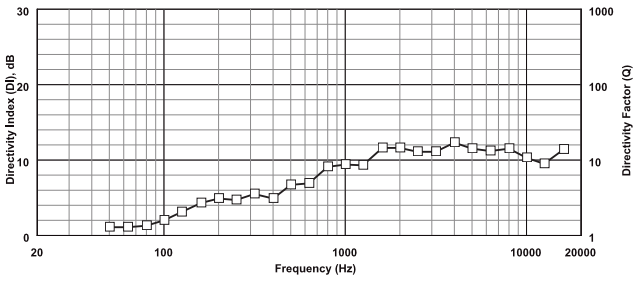

Block Diagram:

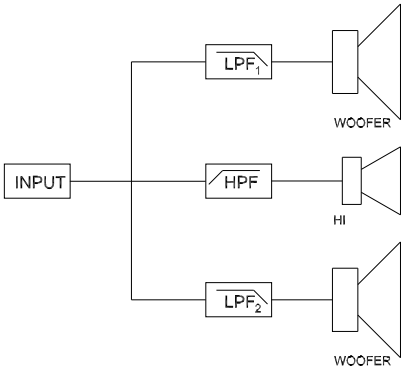

Horizontal Off Axis Frequency Response (left):

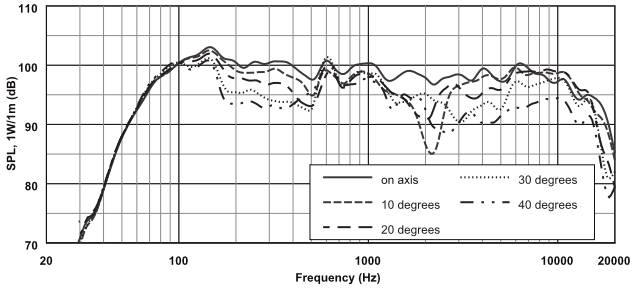

Horizontal Off Axis Frequency Response (right):

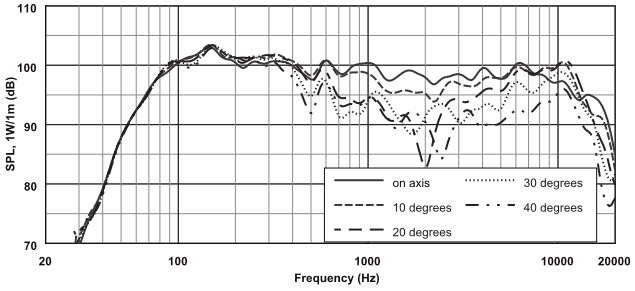

Vertical Off Axis Frequency Response (down):

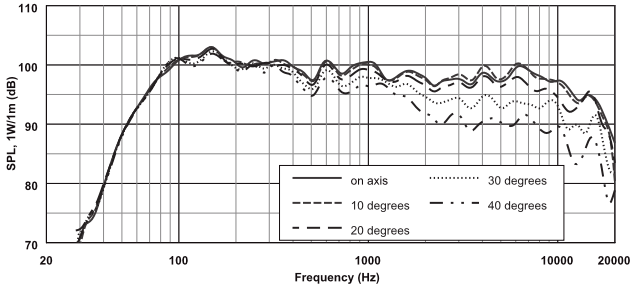

Horizontal and Vertical 1/3 Octave Polars:

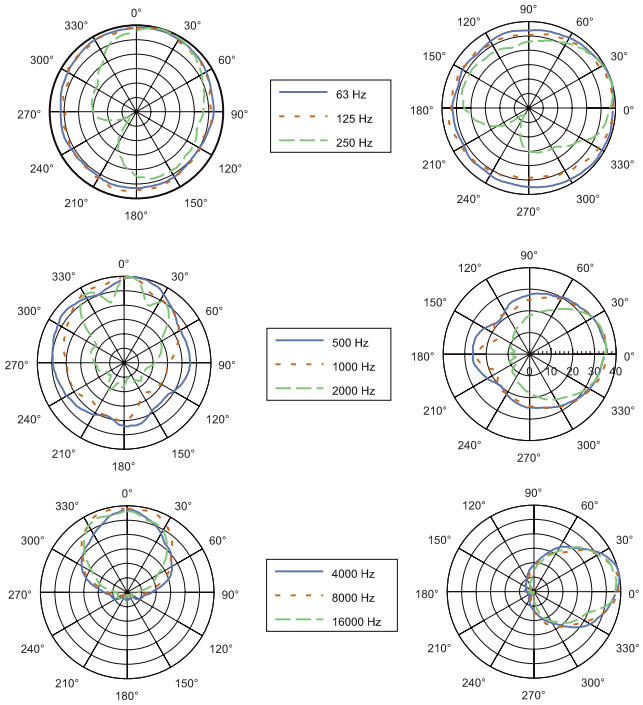

Warning!

Suspending any object is potentially dangerous and should only be attempted by individuals who have a thorough knowledge of the techniques and regulations of suspending objects overhead. Electro-Voice strongly recommends all loudspeakers be suspended taking into account all current national, federal, state, and local laws and regulations. It is the responsibility of the installer to ensure all loudspeakers are safely installed in accordance with all such requirements. When loudspeakers are suspended, Electro-Voice strongly recommends the system be inspected at least once per year or as laws and regulations require. If any sign of weakness or damage is detected, remedial action should be taken immediately. The user is responsible for making sure the wall, ceiling, or structure is capable of supporting all objects suspended overhead. Any hardware used to suspend a loudspeaker not associated with Electro-Voice is the responsibility of others.

Dimensions:

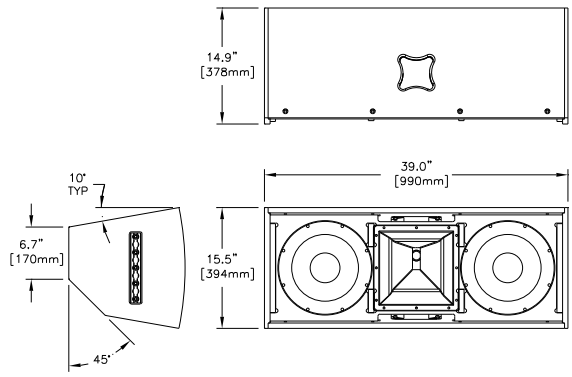

Architectural and Engineering Specifications:

The two-way, full-range loudspeaker system shall incorporate two 12-inch transducers as the LF components and once 3-inch diameter voice coil/diaphragm compression driver as the HF component. The compression driver shall be mounted on a 75-degree x 50-degree asymmetrical constant directivity horn with a factory delivered position of 15 degrees up/35 degrees down/50 degrees horizontal configuration. The horn shall be constructed of a material and design to allowing a full 360-degree rotation of the horn. The input panel shall incorporate a switch, allowing external configuration between biamped or passive operation. Input connections shall be accommodated with two paralleled NL4 female Speakon connectors. A 16 GA powder-coated fabric-backed perforated steel grille shall cover the front of the system. Loudspeaker system frequency response shall be no less than 52 Hz to 18 kHz (-10 dB) measured on axis.

The loudspeaker shall produce a sound pressure level (SPL) of 100 dB on axis at 1 meter with a power input of 1 watt and shall be capable of sustaining a full power, long-term average output of 127 dB on axis at 1 meter (133 dB peaks). The full-range system, with passive network engaged, shall handle 600 watts of amplified power long-term in compliance with AEA-EIA standards and have a nominal impedance of 6 ohms. The loudspeaker enclosure shall be constructed of 13-ply void free cross-grain-laminated Birch plywood. It shall be finished in black or white EVCoat, or available unfinished. It shall have a 5 sided shape. The top and bottom of the enclosure shall have L-track rigging. Three single studded ancra fittings rated for overhead use shall be included with each loudspeaker system. Fittings shall include a tethered safety pin to ensure proper installation. The two-way full-range loudspeaker system shall be the Electro-Voice model QRx212H.

Compatible System Solutions:
EV 91202 Modular Precision Amplifier
M212 Processing Module
EV P3000 Precision Series Amplifier
Dx38 Digital Sound System Controller

Parts included

3 - Ancra single studded fittings

Ordering information

QRX-212H/75-BLK
Dual 12 inch 2-way, 75° x 50° asymmetrical HF with DH7, 600 W, passive/biamp, flying, horizontal mount speaker system, black
Order number **QRX-212H75-BLKLB**

QRX-212H/75-WH
Dual 12 inch 2-way, 75° x 50° asymmetrical HF with DH7, 600 W, passive/biamp, flying, horizontal mount speaker system, white
Order number **QRX-212H/75-WH@L**

Accessories

SSK-1
SSK-1, Single stud rigging kit (set of 3)
Order number **SSK-1-LB**

Represented by:

Germany:
Bosch Sicherheitssysteme GmbH
Robert-Bosch-Ring 5
85630 Grasbrunn
Germany

Bosch Security Systems, Inc.
12000 Portland Avenue South
Burnsville MN 55337
USA

www.electrovoice.com

Document Number F.01U.177.730 | Vs5 | 22. Oct 2015